BULLETIN 2730-L

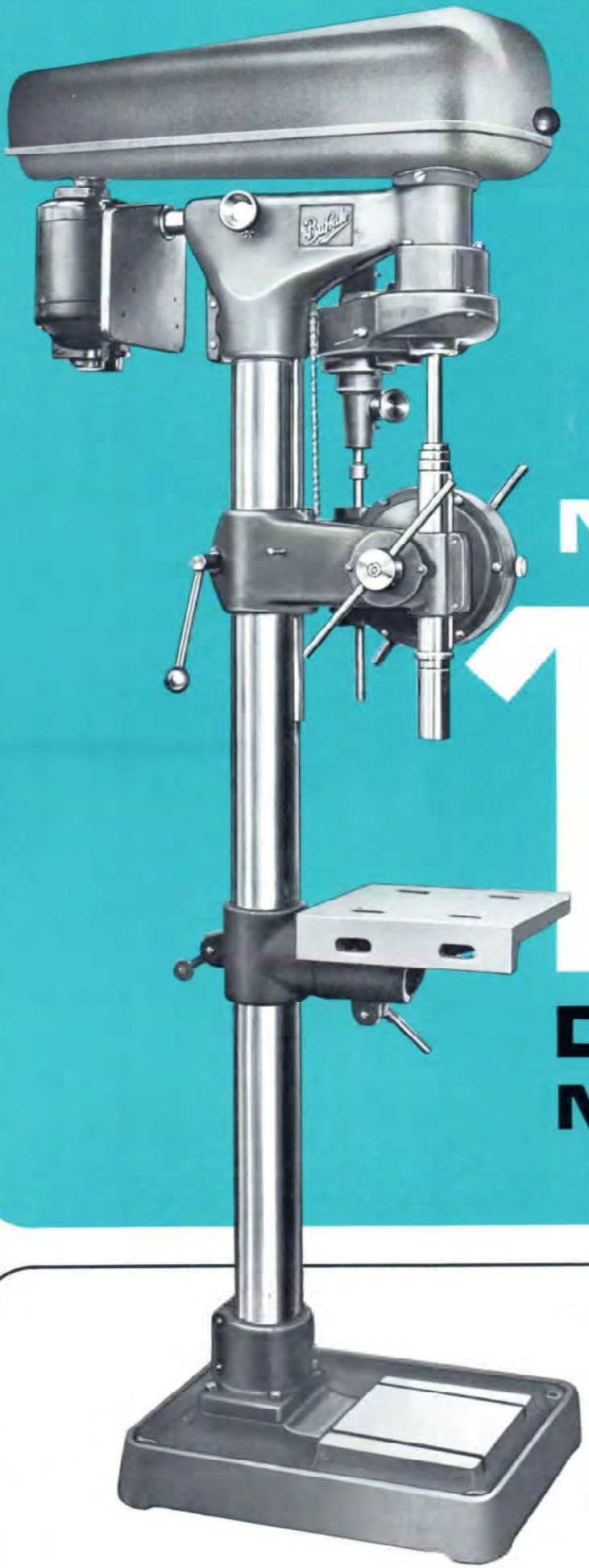

NUMBER 16

"Buffalo"

DRILLING MACHINES

GREATER PRODUCTION
LOWER COST

TYPES AVAILABLE

The No. 16 Drill is manufactured in 3 sizes, 8", 12", or 15" overhang.

The 8" model is available in the Bench, Pedestal or Round Column Floor type; the 12" and 15" models in Bench and Pedestal types only.

Choice of a Sensitive or Power Feed Spindle is provided in all sizes and types of #16 Drilling Machines.

ROUND COLUMN, FLOOR TYPE - Featured is a combination table having a machined skirt on one side. The table may be tilted to any angle or swiveled about the column. This simplifies set-ups. When swung out of the way, it enables use of the machined base for extra high work or heavy jigs. A safety collar prevents the table dropping when unclamped. A crank operated table raising screw is available as an optional extra.

PEDESTAL TYPE - Arrangements of 1 to 8 spindles sensitive or 1 to 6 spindles power feed are available. The heads are directly and rigidly supported on a box frame pedestal. Tables have a built in coolant trough and are accurately machined and fitted to the dove-tail pedestal ways. A T-slot wear plate is available at extra cost. The table is adjusted by means of a crank and telescoping screw. A clamping mechanism is provided. The wider machines also have guides and stabilizing screws at the outside ends of the pedestals. The base features a built-in coolant sump.

BENCH TYPE - Heads are mounted directly on a one piece heavy cast iron table which features a large oil trough rim. Arrangements are available with 1 to 8 spindles sensitive or 1 to 6 spindles power feed, and can be equipped with a 2 T-slot wear plate, bench legs, and a coolant system.

NUMBER 16 "Buffalo" DRILLING MACHINES

BENCH DRILLS — 8" overhang & power feed unit shown.

These machines are truly quality tools, simple to operate and built to give dependable service and long life.

MULTIPLE SPINDLE PEDESTAL MODELS, a 3-spindle machine with 12" overhang and power feed is shown.

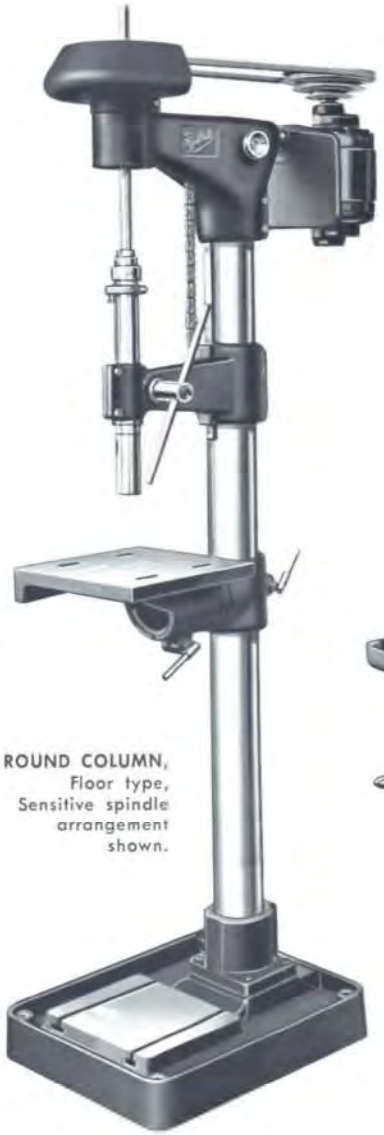

ROUND COLUMN, Floor type, Sensitive spindle arrangement shown.

PEDESTAL TYPE, a single spindle machine with 12" overhang, power feed, and a 2T-slot wear plate is shown.

NUMBER 16 "Buffalo" DRILLING MACHINES

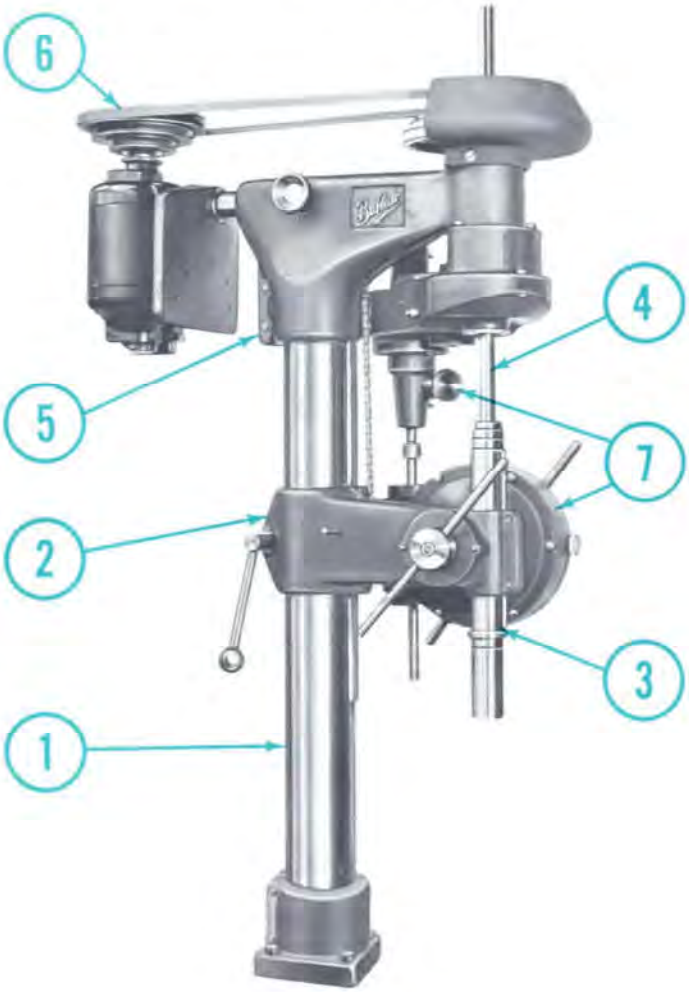

Details of Head Construction

1. COLUMN provides a rigid backbone for the machine. It consists of a heavy wall steel tube, 4″ nominal diameter, turned and ground true from base to head.

2. SLIDING HEAD is keyed to the column and quickly positioned vertically. A quarter turn clamp screw releases the sliding head for adjustment within its 8″ of travel. The Spindle and Quill is counter-balanced by a coiled spring with adjustable tension to compensate for special tooling or tapping attachment. The sliding head is counter balanced by a weight suspended within the column.

3. SPINDLE SLEEVE (QUILL) has 4″ of bearing length in the sliding head. It is graduated in 1/16″. A depth stop collar is supplied. The sleeve is of alloy steel with rack teeth, cut integrally, and eliminates the conventional large and clumsy combination key and rack. The key is separate and prevents lateral motion of the spindle sleeve. Ball bearings in oversize cages are mounted at the ends of the sleeve.

4. SPINDLE is 15/16″ diameter, precision ground with accurately hobbed spline. Spindle nose has No. 3 Morse taper as standard; No. 2 as optional. The spindle is indicated at assembly and held to a maximum of .002″ run out at the end of a 6″ test arbor.

5. HEAD FRAME is clamped to the column. It carries the spindle driving sleeve in two large ball bearings. The spindle pulley is keyed to the sleeve and drives the spindle through six splines. The motor bracket, projecting from the rear of the head, may be conveniently adjusted for belt tension through rack pinion and locking screw. No belt forces are directly transmitted to the spindle.

6. DRIVE consists of 5-step cast iron V-belt pulleys, balanced for vibration free operation. A V-belt delivers full motor horsepower quietly and efficiently. A half belt guard is provided at the operators' end. Fully enclosed belt guards are available as an extra.

7. POWER FEED is available on all sizes and models. A selector knob allows the operator to determine the feed, .003″, .006″, .009″ or .012″. Selection can be made while the machine is operating at low speed. The feed handle advances the spindle to the work and automatically engages the power feed. A reverse motion of the feed handle will disengage the power feed prior to the depth stop knockout. The power feed can be locked out for sensitive drilling. Further details are shown on page 6 and 7.

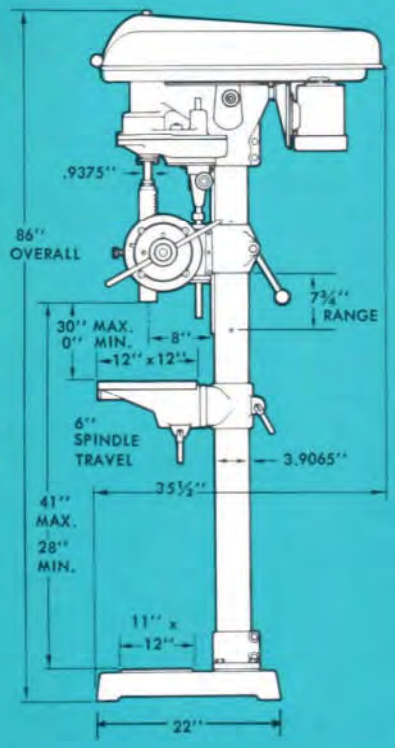

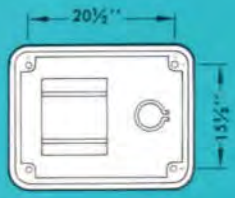

Specifications and Capacities

Capacity (in mild steel)	7/8"
Motor H. P.	1/2-3/4
Spindle Diameter	.937
Spindle Nose Diameter	1.875
Spindle Sleeve Diameter (minimum)	1.875
Spindle Nose Morse Taper (No. 2 optional)	No. 3
Spindle Speeds (1800 R.P.M. Motor)	400-670-1100-1800-3000 R.P.M.
Spindle Speeds (1200 R.P.M. Motor)	265-460-750-1200-2000 R.P.M.
Spindle Speeds (900 R.P.M. Motor)	200-335-550-900-1500 R.P.M.
Column Diameter	4"
Spindle Travel (Power Feed)	6"
Spindle Travel - Sensitive with Depth Stop	5¼"
Spindle Travel - Sensitive without Depth Stop	6¾"
Range Adjustment of Sliding Head (Power Feed)	7¾"
Range Adjustment of Sliding Head (Sensitive)	8¼"
Power Feed per R.P.M.	003"-006"-009"-012"

WE RESERVE THE RIGHT TO CHANGE THE DESIGN, SPECIFICATIONS, AND CONSTRUCTION OF ANY MACHINE OF OUR MANUFACTURE WITHOUT INCURRING ANY OBLIGATION TO THE PURCHASERS OR USERS OF BUFFALO EQUIPMENT

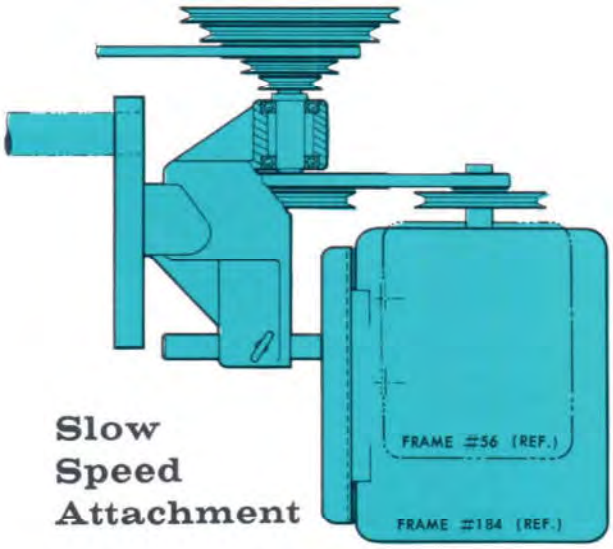

Slow Speed Attachment

RPM OF MOTOR

1800	1500 (50 cycle)	1200	900
SPINDLE SPEEDS			
3000	2500	2000	1500
1800	1500	1200	900
1100	910	750	550
750	625	500	375
670	560	460	335
450	375	300	225
400	330	265	200
275	228	187	137
167	140	115	84
100	83	66	50

Complete Belt Guard

Pressed steel clamshell type belt guard for 8" overhang sensitive and power feed models is available as an extra.

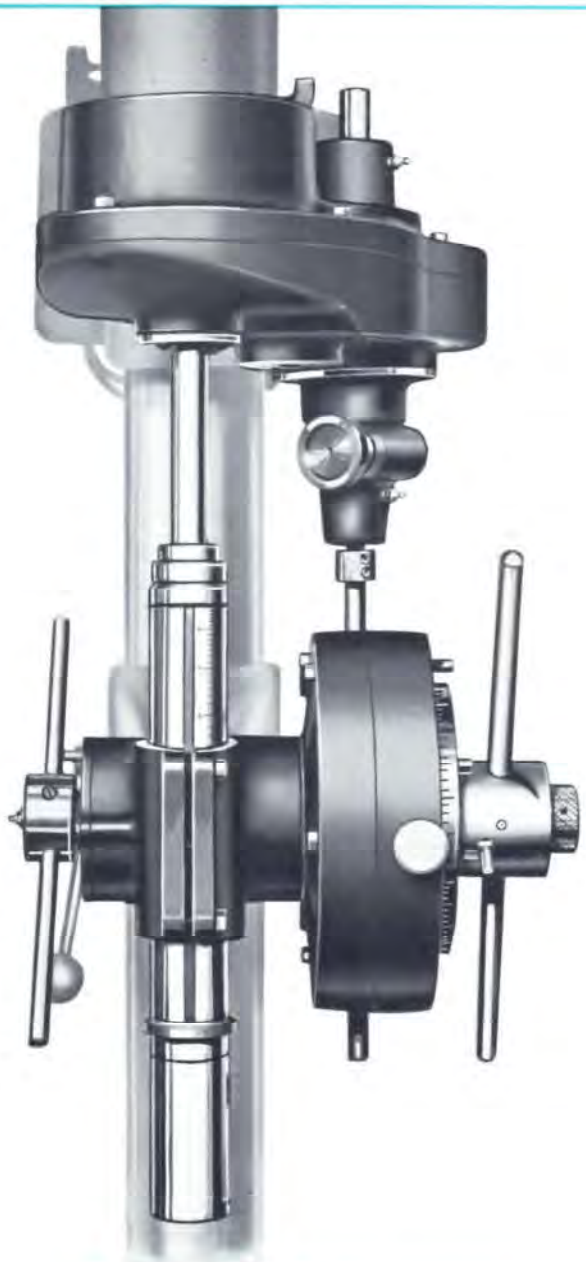

NUMBER

"Buffalo"

16

DRILLING MACHINES

POWER FEED (optional extra)

Increases the versatility and widens the application for the #16 Drill. This substantial positive gear drive and positive clutch type power feed has what it takes to drill up to 7/8" in mild steel on a production basis.

Design is simple, positive, sturdy and accurate without belts, friction members or complicated mechanisms.

No adjustments are necessary. Occasional lubrication is all that is required.

Fool-Proof

Feed engaged by feed motion of handle

Feed disengaged by upward motion of handle

Feed is positive, no adjustment

Feed "take-off" is fully geared

Depth dial reads from front of drill

Depth control set from front

Feed dial read from front

Feed change made while machine is idling at low speed

All these features are incorporated in the #16 Power Feed Unit.

Details of Construction

High speed bearings are double row ball bearings. Slow speed shafts operate in bronze bushings. Worm is hardened alloy steel mounted in combination radial-thrust ball bearings. Positive drive clutch members are of heat treated chrome nickel alloy steel. They practically never wear out or require adjustment. Individual hand assembly is your assurance of permanent accuracy and extended trouble free service.

Simple and Safe Operation

The feed clutch cam is held out of engagement by spring pressure in a manner which allows the spindle to be run up or down manually until the drill meets the work. When contact is made, the clutch cams engage the power feed with the quill pinion. When the feed advances to the required depth the cam hub is released by a pin on the indicator dial and disengages the feed. A coiled spring within the sliding head returns the spindle and quill to its original position. A safety stop and overload shear pin protect the feed mechanism.

A left hand feed handle is keyed to the quill pinion to enable engagement with the power feed before contacting the work piece. This prevents small drills from breaking when being used.

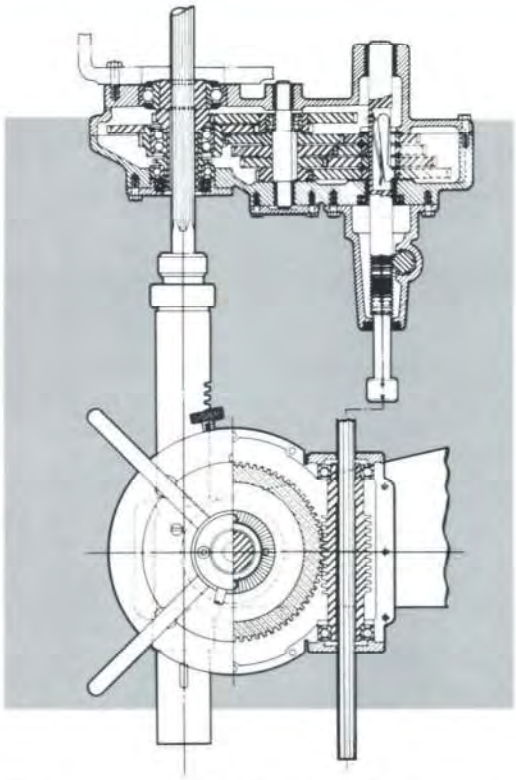

This cross-section shows the rugged, all-geared construction of the #16 Power Feed. Features worth noting are:

1. Ball bearing mounting of the high speed drive.
2. Hardened inserts in the selective gear train.
3. Triple grease seals to prevent leakage.

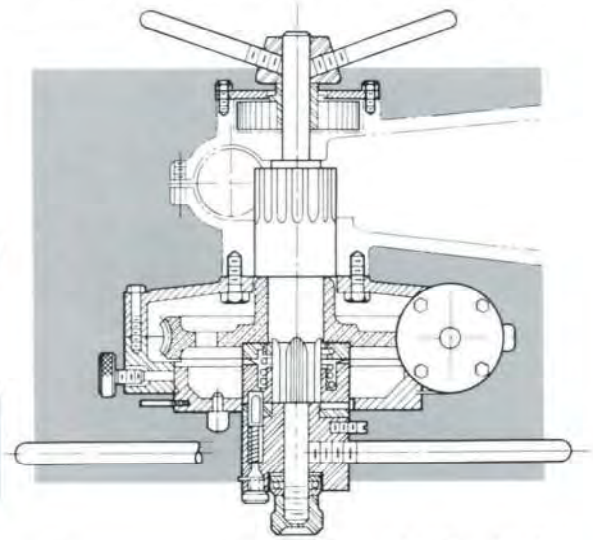

This cross-section is through the feed hub, clutch, worm gear and feed pinion. All operating members are heat treated tool steel. No wear, no adjustments, no trick mechanisms. Construction is simple, practical and durable.

TAPPING DEVICES (optional extra)

The three types available are: 1. Friction type attachment. 2. Motor reverse control operating from a manual selector switch or off-forward-reverse push button and 3. Motor reverse control, automatically actuated by the feed handle.

Motor reverse tapping is available either on Sensitive or Power Feed machines. The Power Feed is interlocked in a neutral position when tapping. Standard duty 3-phase motors are satisfactory for occasional tapping. For production tapping high-torque, high-slip reversing motors must be used. For continuous production the maximum number of motor reversals is 10 per minute.

Taps under $^3/_8$″ are best tapped with a friction type tapping attachment. The tapping capacity is $^3/_4$″ in cast iron and $^5/_8$″ in mild steel.

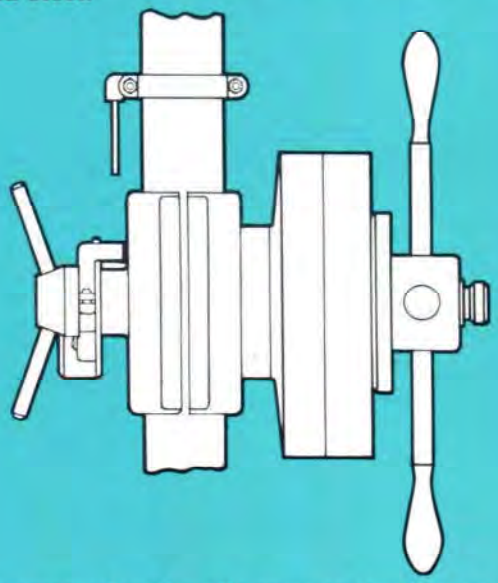

Automatic feed handle reverse tapping control. Shown with power feed, it is also available for sensitive operation.

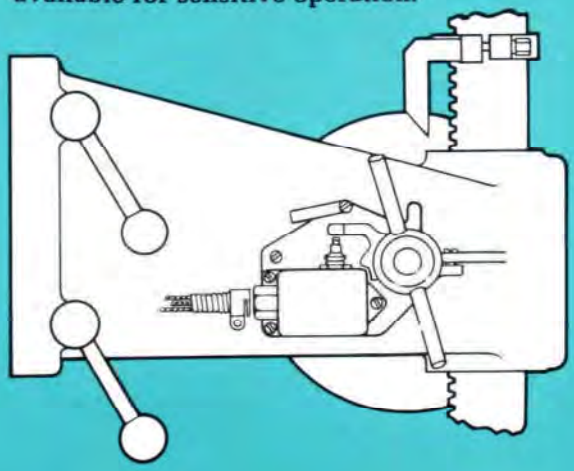

Combinations & Specifications

SYMBOLS: S=SENSITIVE P=POWER FEED		WORKING SURFACE OF TABLE OR BASE — OVERHANG 8"	12"	15"	CENTER OF SPINDLES	WEIGHTS — OVERHANG 8"	12"	15"
O. Round Column		12" x 12"T 11" x 12"B				400		
P.	BEN	14" x 14"	23" x 18"	23" x 18"		359	530	550
	PED	14" x 18"	23" x 22"	23" x 22"		615	687	697
S.	BEN	14" x 14"	23" x 18"	23" x 18"		294	365	385
	PED	14" x 18"	23" x 22"	23" x 22"		515	576	586
S.S.	BEN	14" x 26"	23" x 30"	23" x 30"	12"	568	705	745
	PED	14" x 30"	23" x 34"	23" x 34"	10"	977	1039	1049
S.P.	BEN	14" x 26"	23" x 30"	23" x 30"	12"	733	870	910
	PED	14" x 30"	23" x 34"	23" x 34"	10"	1077	1150	1160
② P.S.	BEN	14" x 31"	23" x 42"	23" x 42"	16"	788	940	980
	PED	14" x 42"	23" x 46"	23" x 46"	20"	1483	1303	1313
③ P.P.	BEN	14" x 31"	23" x 42"	23" x 42"	16"	853	1105	1145
	PED	14" x 42"	23" x 46"	23" x 46"	20"	1583	1414	1424
S.S.S.	BEN	14" x 38½"	23" x 42"	23" x 42"	12"	827	1025	1085
	PED	14" x 42"	23" x 46"	23" x 46"	10"	1538	1540	1550
S.S.P.	BEN	14" x 38½"	23" x 42"	23" x 42"	12"	992	1190	1250
	PED	14" x 42"	23" x 46"	23" x 46"	10"	1638	1651	1661
S.P.S.	BEN	14" x 46"	23" x 54"	23" x 54"	16"	1032	1315	1375
	PED	14" x 54"	23" x 58"	23" x 58"	19"	1701	1721	1731
P.S.S.	BEN	14" x 46"	23" x 54"	23" x 54"	16"	1032	1315	1375
	PED	14" x 54"	23" x 58"	23" x 58"	19"	1701	1721	1731
P.P.S.	BEN	14" x 46"	23" x 54"	23" x 54"	16"	1197	1480	1540
	PED	14" x 54"	23" x 58"	23" x 58"	19"	1801	1832	1842
P.S.P.	BEN	14" x 46"	23" x 54"	23" x 54"	16"	1197	1480	1540
	PED	14" x 54"	23" x 58"	23" x 58"	19"	1801	1832	1842
S.P.P.	BEN	14" x 46"	23" x 54"	23" x 54"	16"	1197	1480	1540
	PED	14" x 54"	23" x 58"	23" x 58"	19"	1801	1832	1842
P.P.P.	BEN	14" x 46"	23" x 54"	23" x 54"	16"	1362	1645	1705
	PED	14" x 54"	23" x 58"	23" x 58"	19"	1901	1943	1953
S.S.S.S.	BEN	14" x 50½"	23" x 54"	23" x 54"	12"	1071	1402	1480
	PED	14" x 54"	23" x 58"	23" x 58"	10"	1756	1827	1837
S.S.S.P.	BEN	14" x 50½"	23" x 54"	23" x 54"	12"	1236	1565	1645
	PED	14" x 54"	23" x 58"	23" x 58"	10"	1856	1938	1948
S.S.P.S.	BEN	14" x 74½"	23" x 74"	23" x 74"	20"	1381	1765	1845
	PED	17" x 82"	23" x 77"	23" x 77"	19"	2209	2566	2576
S.P.S.S.	BEN	14" x 74½"	23" x 74"	23" x 74"	20"	1381	1765	1845
	PED	17" x 82"	23" x 77"	23" x 77"	19"	2209	2566	2576
P.S.S.S.	BEN	14" x 74½"	23" x 74"	23" x 74"	20"	1381	1765	1845
	PED	17" x 82"	23" x 77"	23" x 77"	19"	2209	2566	2576
P.P.S.S.	BEN	14" x 74½"	23" x 74"	23" x 74"	20"	1546	1930	2010
	PED	17" x 82"	23" x 77"	23" x 77"	19"	2309	2677	2687
P.S.P.S.	BEN	14" x 74½"	23" x 74"	23" x 74"	20"	1546	1930	2010
	PED	17" x 82"	23" x 77"	23" x 77"	19"	2309	2677	2687
P.S.S.P.	BEN	14" x 74½"	23" x 74"	23" x 74"	20"	1546	1930	2010
	PED	17" x 82"	23" x 77"	23" x 77"	19"	2309	2677	2687
S.P.S.P.	BEN	14" x 74½"	23" x 74"	23" x 74"	20"	1546	1930	2010
	PED	17" x 82"	23" x 77"	23" x 77"	19"	2309	2677	2687
S.S.P.P.	BEN	14" x 74½"	23" x 74"	23" x 74"	20"	1546	1930	2010
	PED	17" x 82"	23" x 77"	23" x 77"	19"	2309	2677	2687
S.P.P.S.	BEN	14" x 74½"	23" x 74"	23" x 74"	20"	1546	1930	2010
	PED	17" x 82"	23" x 77"	23" x 77"	19"	2309	2677	2687
P.P.P.S.	BEN	14" x 74½"	23" x 74"	23" x 74"	20"	1711	2095	2175
	PED	17" x 82"	23" x 77"	23" x 77"	19"	2409	2788	2798
P.P.S.P.	BEN	14" x 74½"	23" x 74"	23" x 74"	20"	1711	2095	2175
	PED	17" x 82"	23" x 77"	23" x 77"	19"	2409	2788	2798
P.S.P.P.	BEN	14" x 74½"	23" x 74"	23" x 74"	20"	1711	2095	2175
	PED	17" x 82"	23" x 77"	23" x 77"	19"	2409	2788	2798
S.P.P.P.	BEN	14" x 74½"	23" x 74"	23" x 74"	20"	1711	2095	2175
	PED	17" x 82"	23" x 77"	23" x 77"	19"	2409	2788	2798
P.P.P.P.	BEN	14" x 74½"	23" x 74"	23" x 74"	20"	1876	2260	2340
	PED	17" x 82"	23" x 77"	23" x 77"	19"	2509	2903	2913
① S.S.S.S.S.S.	BEN	14" x 74½"	23" x 64"	23" x 64"	10"	1624	2100	2220
	PED	14" x 65¼"	23" x 77"	23" x 77"	10"	2409	2889	2899
② P.P.P.P.P.P.	BEN	14" x 91"	23" x 94"	23" x 94"	22⅜"	2725	3290	3410
	PED	17" x 114"	23" x 115"	23" x 115"	19¼"	3950	4100	4160
② S.S.S.S.S.S.S.S.	B.	14" x 91"	23" x 94"	23" x 94"	16"	2175	2850	3000
	P.	17" x 114"	23" x 115"	23" x 115"	13¾"	3050	3900	4050

Listed above are the possible combinations of No. 16 Sensitive and Power Feed Machines, together with specification data, which is intended to import needed information. Each combination has been assigned a model number to simplify ordering.

① 12" center of spindles for 8" O.H.
② 15" center of spindles for 8" O.H.
③ 21" center of spindles for 8" O.H.

NUMBER 16 DRILLS / SENSITIVE MODELS

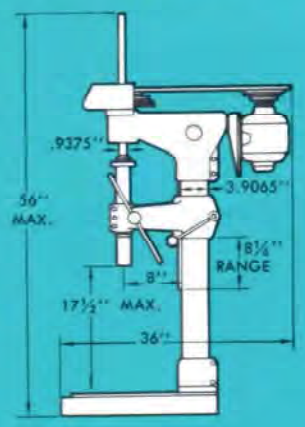

8" BENCH, SENSITIVE
(See Dimensions Page 11)

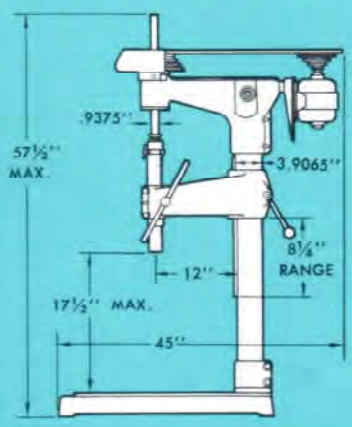

12" BENCH, SENSITIVE
(See Dimensions Page 11)

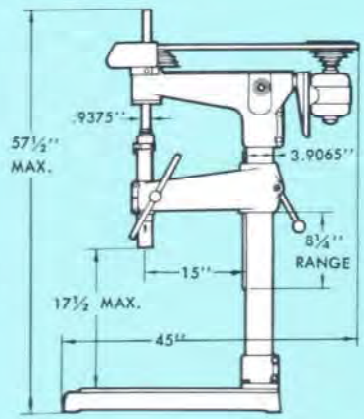

15" BENCH, SENSITIVE
(See Dimensions Page 11)

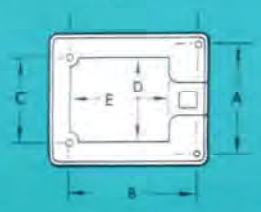

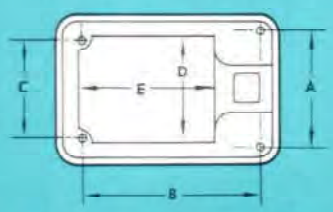

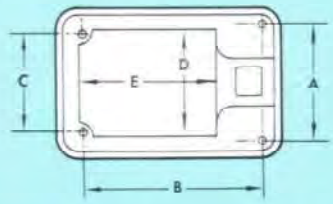

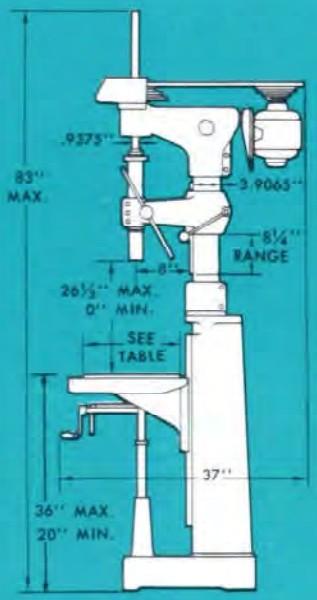

8" PEDESTAL, SENSITIVE
(See Dimensions Page 11)

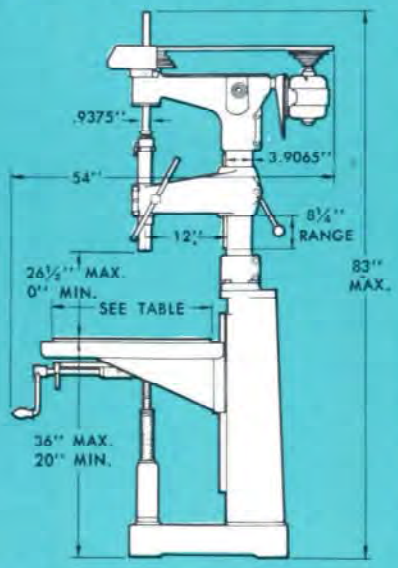

12" PEDESTAL, SENSITIVE
(See Dimensions Page 11)

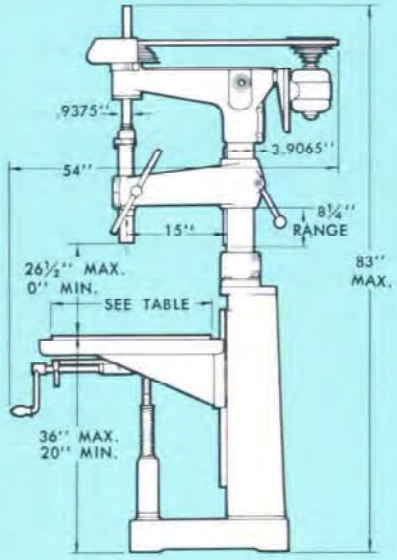

15" PEDESTAL, SENSITIVE
(See Dimensions Page 11)

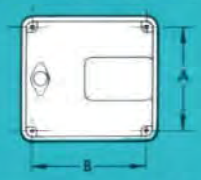

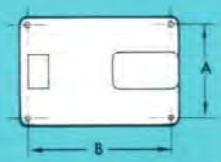

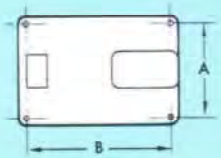

NUMBER 16 DRILLS / POWER FEED MODELS

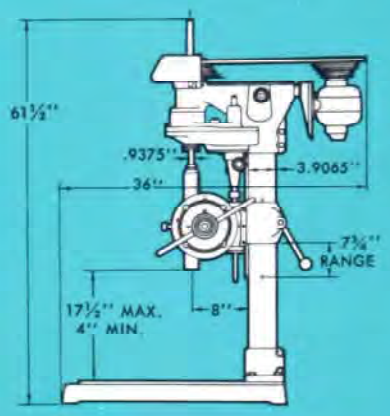

8" BENCH,
POWER FEED
(See Dimensions Page 11)

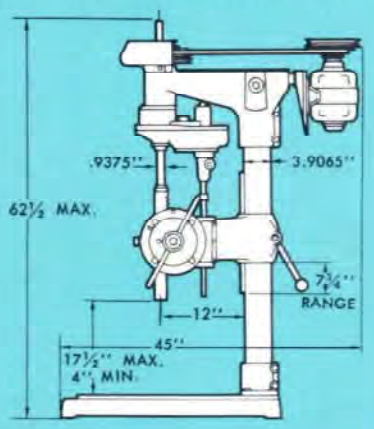

12" PEDESTAL,
POWER FEED
(See Dimensions Page 11)

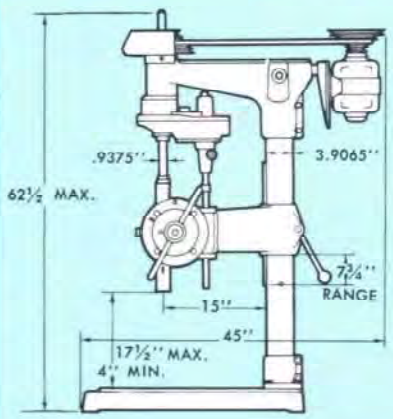

15" BENCH,
POWER FEED
(See Dimensions Page 11)

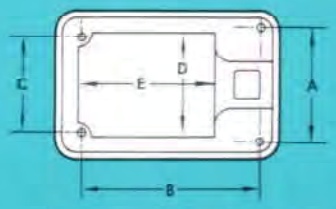

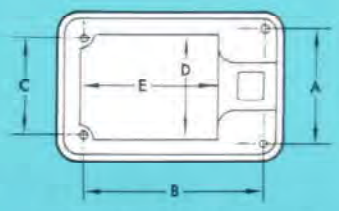

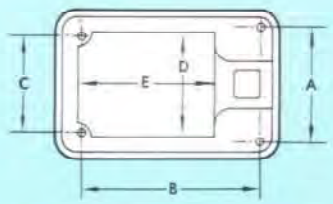

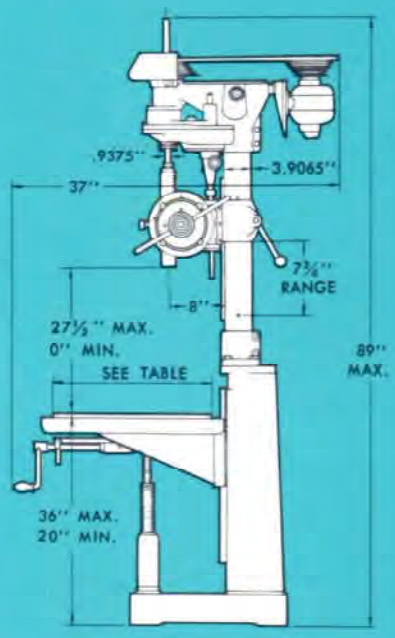

8" PEDESTAL,
POWER FEED
(See Dimensions Page 11)

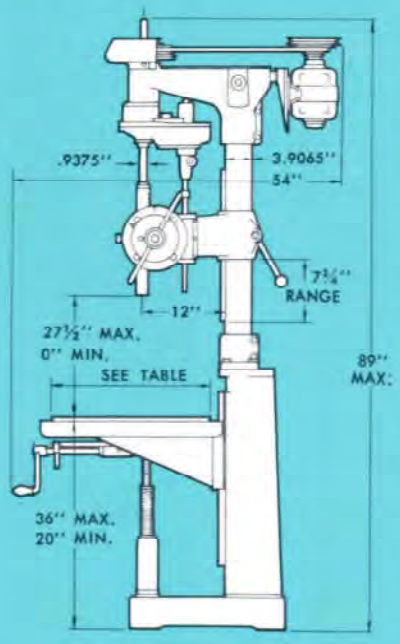

12" PEDESTAL,
POWER FEED
(See Dimensions Page 11)

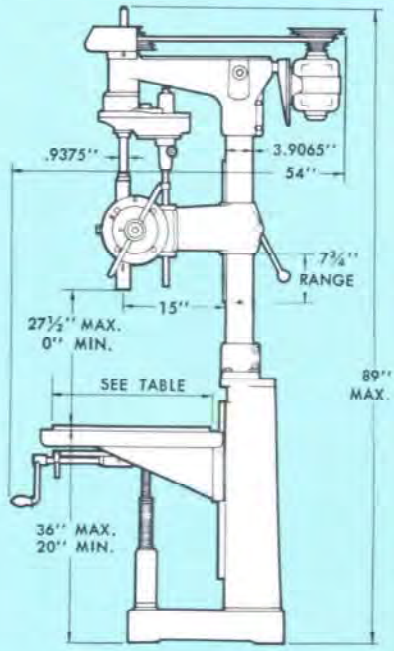

15" PEDESTAL,
POWER FEED
(See Dimensions Page 11)

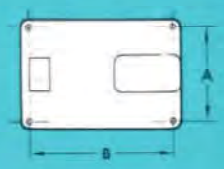

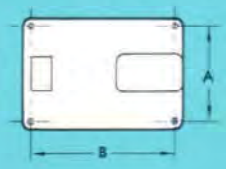

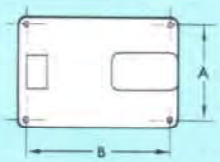

NUMBER 16 DRILLS

Table of Dimensions

SYMBOLS:
S=SENSITIVE
P.F.=POWER FEED

BENCH TYPES

SENSITIVE

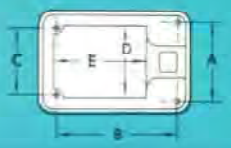

	8" OVERHANG						12" OVERHANG						15" OVERHANG					
	SPINDLES						SPINDLES						SPINDLES					
	1	2	3	4	6	8	1	2	3	4	6	8	1	2	3	4	6	8
A	15	27	39¾	51¾	75¾	92¼	19	31	43	55	65	95	19	31	43	55	65	95
B	18⅝	18½	18 7/16	18 5/16	18 5/16	19 3/16	27⅝	28⅛	28⅛	28⅛	28⅛	28⅛	27⅝	28⅛	28⅛	28⅛	28⅛	28⅛
C	13	25⅛	37⅜	49⅝	73⅝	90	17	29	41	53	63	93	17	29	41	53	63	93
D	14	26⅛	38½	50½	74½	91	18	30	42	54	64	94	18	30	42	54	64	94
E	14	14	14	14	14	14	23	23	23	23	23	23	23	23	23	23	23	23

POWER FEED

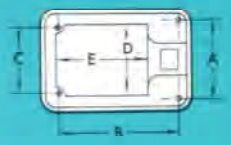

	8" OVERHANG						12" OVERHANG						15" OVERHANG					
A	15	32¼	47	75¾	92¼	NOT AVAILABLE	19	43	55	75	95	NOT AVAILABLE	19	43	55	75	95	NOT AVAILABLE
B	18⅝	19 3/16	18 7/16	18 7/16	19 3/16		27⅝	28⅛	28⅛	28⅛	28⅛		27⅝	28⅛	28⅛	28⅛	28⅛	
C	13	30	45	73⅝	90		17	41	53	73	93		17	41	53	73	93	
D	14	31	46	74½	91		18	42	54	74	94		18	42	54	74	94	
E	14	14	14	14	14		23	23	23	23	23		23	23	23	23	23	

PEDESTAL TYPES

SENSITIVE

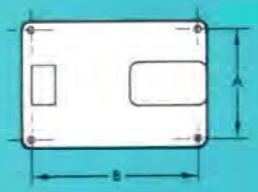

	8" OVERHANG						12" OVERHANG						15" OVERHANG					
	SPINDLES						SPINDLES						SPINDLES					
	1	2	3	4	6	8	1	2	3	4	6	8	1	2	3	4	6	8
A	19¾	19¾	29¾	39¾	60	106	19¾	19¾	29¾	39¾	60	106	19¾	19¾	29¾	39¾	60	106
B	19	19	19	19	19	19	19	19	19	19	19	19	19	19	19	19	19	19

POWER FEED

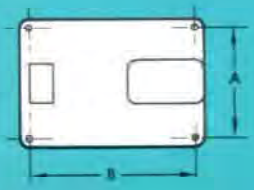

	8" OVERHANG					12" OVERHANG					15" OVERHANG				
	SPINDLES					SPINDLES					SPINDLES				
	1	2	3	4	6	1	2	3	4	6	1	2	3	4	6
A	19¾	29¾	47¾	66¾	106	19¾	29¾	47¾	66¾	106	19¾	29¾	47¾	66¾	106
B	19	19	19	19	19	19	19	19	19	19	19	19	19	19	19

(8-Spindle power feed models not available)

OTHER POPULAR "BUFFALO" DRILLING MACHINES

No. 15 — A versatile tool. Standard Heavy-Duty models available in Bench, Floor and Multiple Bench Types; Production models in Bench and Pedestal types, 1 to 8 spindles. Ask for Bulletin 4024.

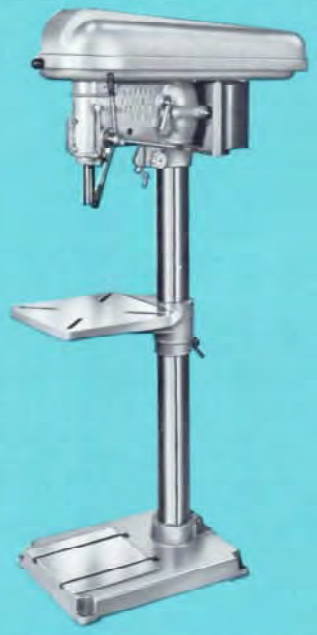

No. 18 — Offers a series of nineteen models in customized designs to meet the needs of your specific applications. Both Bench and Floor types are available. Single and Multi-Spindle arrangements. Ask for Bulletin 3123.

No. 20 — Floor, Bench and Pedestal models . . . 1 to 6 spindles . . . with capacity of 1" in Mild Steel. Power feed or sensitive hand feed, 5-step pulley drive (or optional variable speed drive). Ask for Bulletin 4229.

No. 22 — Sensitive or Power Feed models. Handles as fast and smoothly as a regular sensitive drill on light work. Round column type shown. Also in Pedestal and Multi-Spindle models. Ask for Bulletin 2989.

No. 1A RPMster — An infinitely variable production drilling machine — 1" capacity — 13" overhang — 1½ HP rating — 100 to 3000 RPM. Available in round column or 1-6 spindle pedestal type, sensitive or power feed. Ask for Bulletin 3967.

No. 3B RPMster — The ultimate in a production drill. Round column or 1-6 spindle pedestal type available. 2½" capacity with 7½ HP. Infinitely variable 30 to 2000 RPM. Back gears and power feed are standard. Hollow spindles available. For complete details and other accessory features see Bulletin 3257.

MACHINE TOOL DIVISION

BUFFALO FORGE COMPANY, BUFFALO, N. Y. 14205

CANADIAN BLOWER & FORGE CO., LTD., KITCHENER, ONTARIO

Bulletin 2730-L 5M

Printed in U.S.A.