WIRING DIAGRAMS

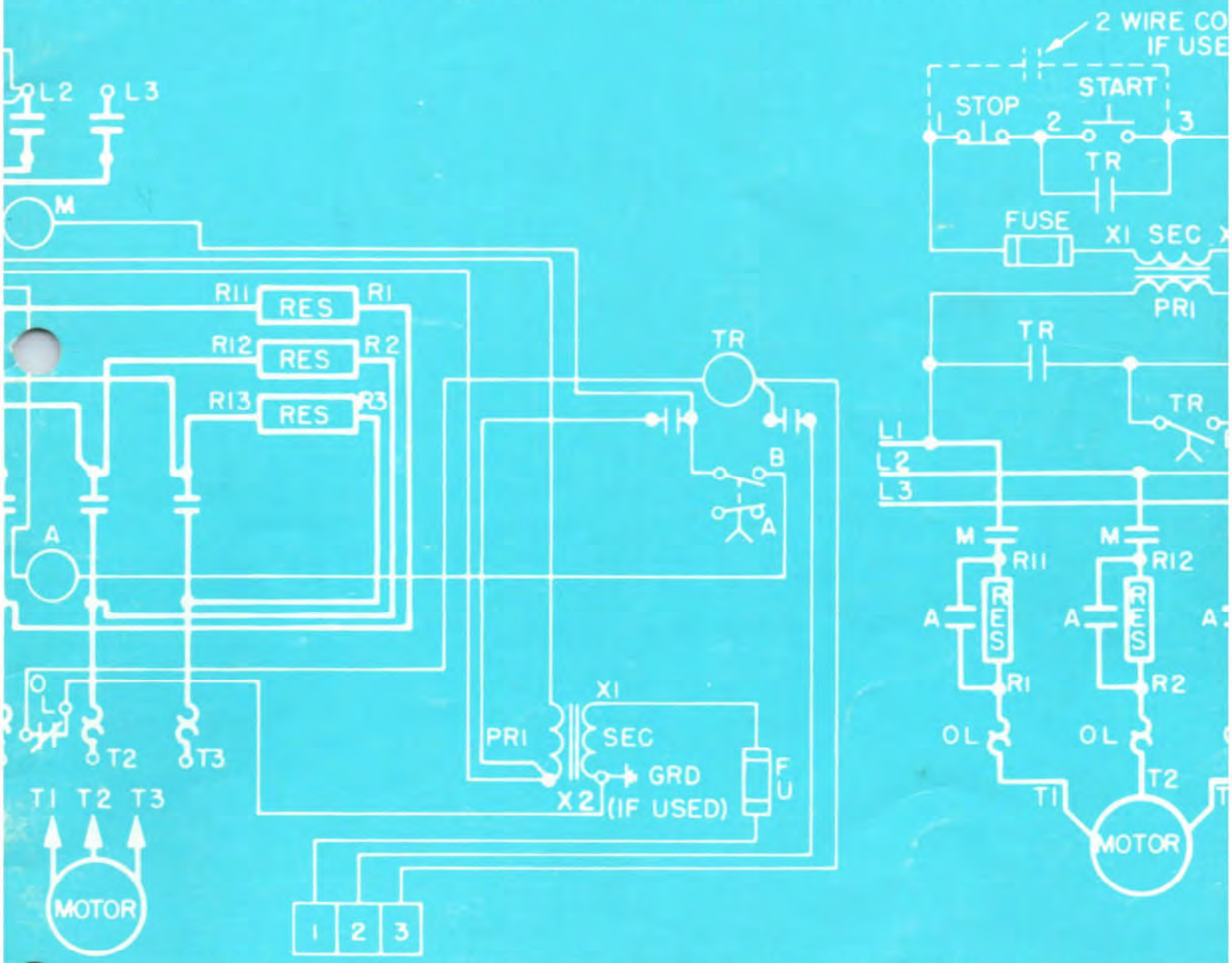

SQUARE D COMPANY

ALPHABETICAL INDEX

NUMERICAL PRODUCT LISTING

STANDARD ELEMENTARY DIAGRAM SYMBOLS

The diagram symbols shown below have been adopted by the Square D Company and conform where applicable to standards established by the National Electrical Manufacturers Association (NEMA).

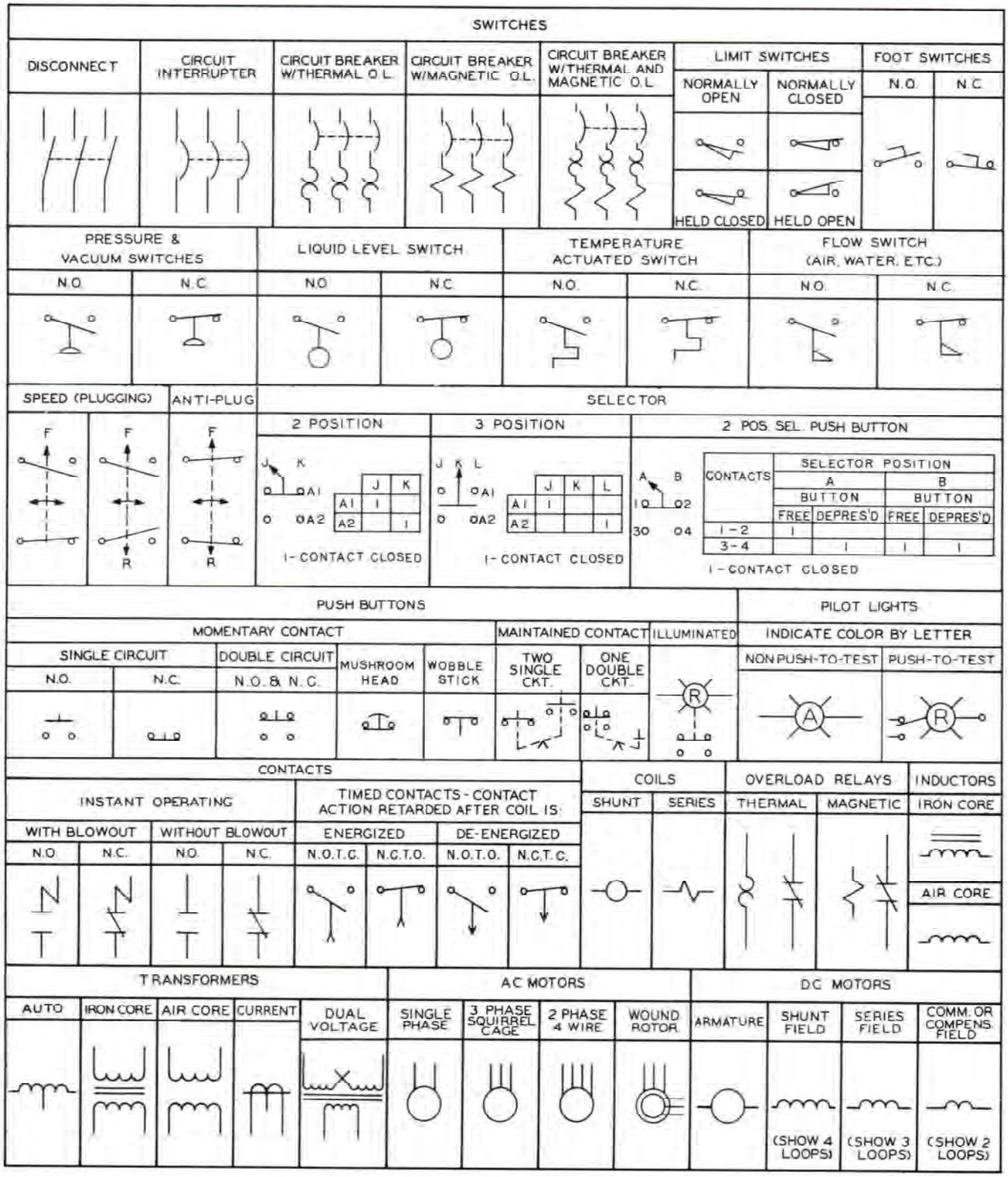

STANDARD ELEMENTARY DIAGRAM SYMBOLS

1

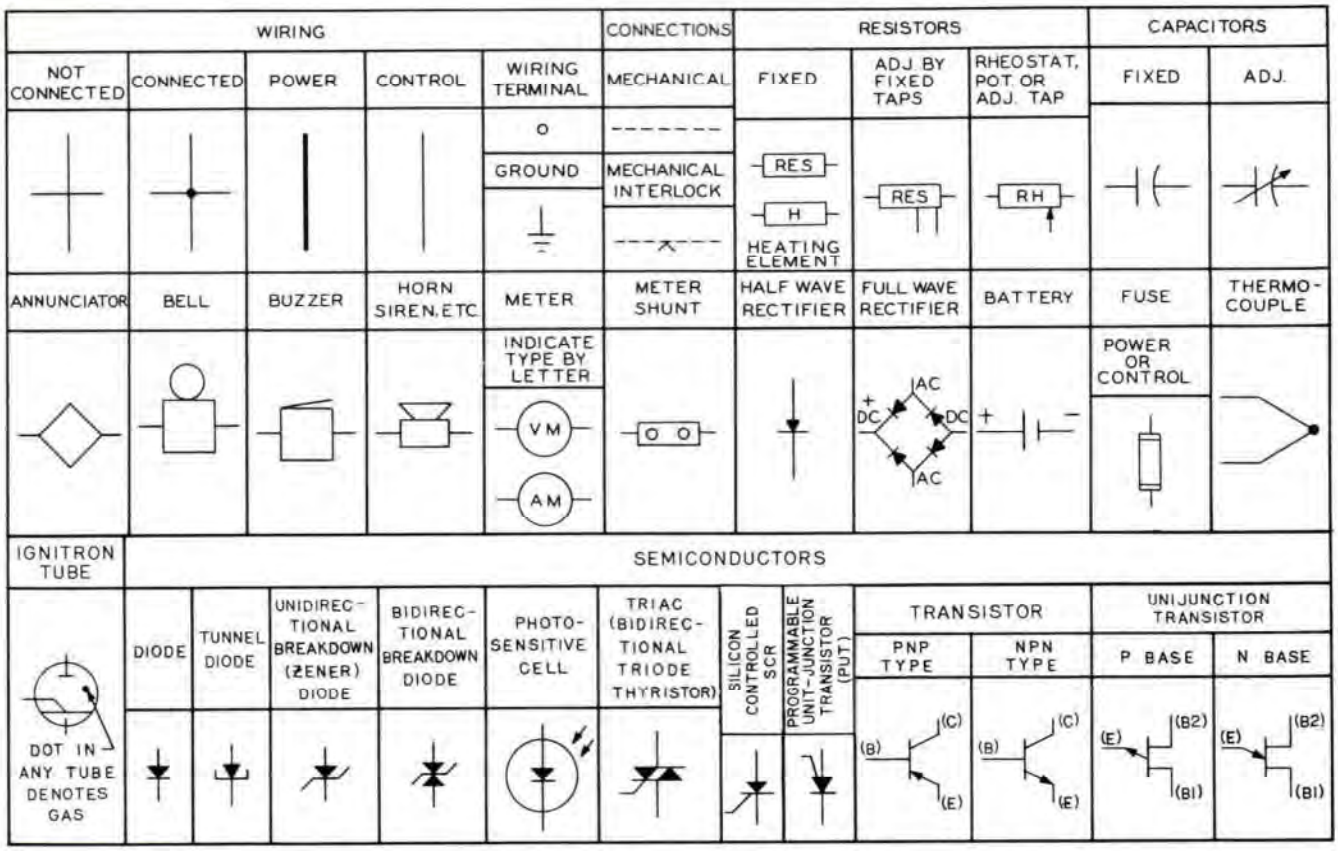

2

SUPPLEMENTARY CONTACT SYMBOLS

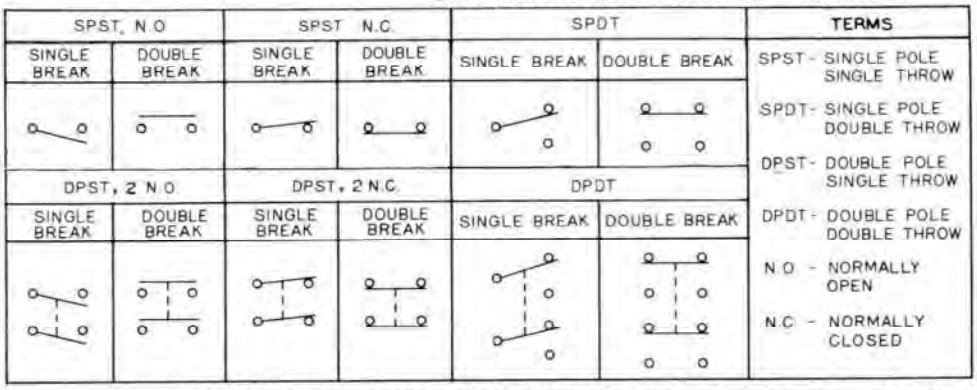

SYMBOLS FOR STATIC SWITCHING CONTROL DEVICES

STATIC SWITCHING CONTROL IS A METHOD OF SWITCHING ELECTRICAL CIRCUITS WITHOUT THE USE OF CONTACTS, PRIMARILY BY SOLID STATE DEVICES. USE THE SYMBOLS SHOWN IN TABLE ABOVE EXCEPT ENCLOSED IN A DIAMOND:

EXAMPLES:

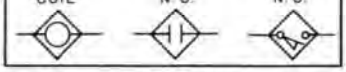

CONTROL AND POWER CONNECTIONS - 600 VOLTS OR LESS - ACROSS-THE-LINE STARTERS

(From NEMA Standard ICS 2-321A.60)

3

		1 PHASE	2 PHASE 4 WIRE	3 PHASE
LINE MARKINGS		L1, L2	L1, L3 - PHASE 1 L2, L4 - PHASE 2	L1, L2, L3
GROUND WHEN USED		L1 IS ALWAYS UNGROUNDED	—	L2
MOTOR RUNNING OVERCURRENT UNITS IN	1 ELEMENT 2 ELEMENT 3 ELEMENT	L1 — —	— L1, L4 —	— — L1, L2, L3
CONTROL CIRCUIT CONNECTED TO		L1, L2	L1, L3	L1, L2
FOR REVERSING INTERCHANGE LINES		—	L1, L3	L1, L3

TERMINOLOGY

1

WIRING DIAGRAM

A WIRING DIAGRAM shows, as closely as possible, the actual location of all of the component parts of the device. The open terminals (marked by an open circle) and arrows represent connections made by the user.

Since wiring connections and terminal markings are shown, this type of diagram is helpful when wiring the device, or tracing wires when troubleshooting. Note that bold lines denote the power circuit, and thin lines are used to show the control circuit. Conventionally, in ac magnetic equipment, black wires are used in power circuits and red wiring is used for control circuits.

A wiring diagram, however, is limited in its ability to convey a clear picture of the sequence of operation of a controller. Where an illustration of the circuit in its simplest form is desired, the elementary diagram is used.

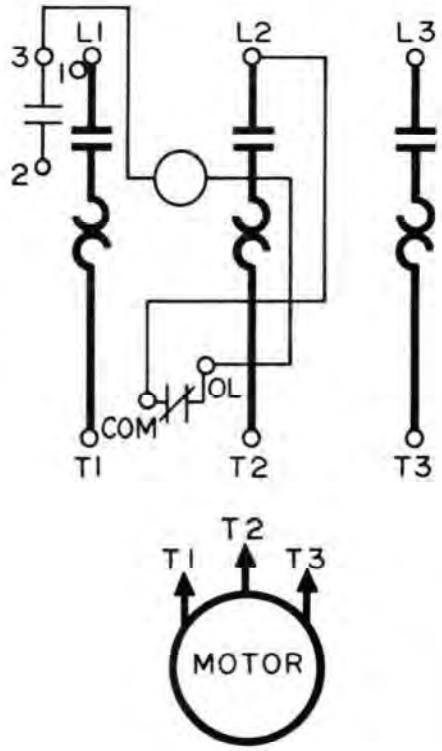

2

ELEMENTARY DIAGRAM

The elementary diagram gives a fast, easily understood picture of the circuit. The devices and components are not shown in their actual positions. All the control circuit components are shown as directly as possible, between a pair of vertical lines, representing the control power supply. The arrangement of the components is designed to show the sequence of operation of the devices, and helps in understanding how the circuit operates. The effect of operating various interlocks, control devices etc. can be readily seen — this helps in trouble shooting, particularly with the more complex controllers. This form of electrical diagram is sometimes referred to as a "schematic" or "line" diagram.

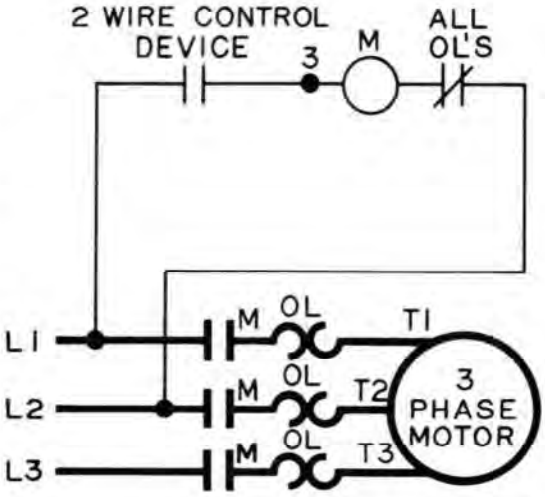

Elementary Diagram
of Starter
(2-wire control)

EXAMPLES OF CONTROL CIRCUITS - ELEMENTARY DIAGRAMS

The control circuits shown may not include overcurrent protective devices that may be required by applicable electrical codes.

For examples of control circuit overcurrent protective devices and the way they are used, see page 9.

Low Voltage Release and Low Voltage Protection are the two basic control circuits encountered in motor control applications. The simplest schemes are shown below. Other variations shown on this and the following pages may appear more complicated, but can always be resolved into these two basic principles.

1

Low Voltage Release is a "two wire" control scheme using a maintained contact pilot device in series with the starter coil. This scheme is used when a starter is required to function automatically without the attention of an operator. If a power failure occurs while the contacts of the pilot device are closed, the starter will drop out. When the power is restored, the starter will pickup automatically through the closed contacts of the pilot device. The term "two wire" control arises from the fact that in the basic circuit, only two wires are required to connect the pilot device to the starter.

2 WIRE CONTROL

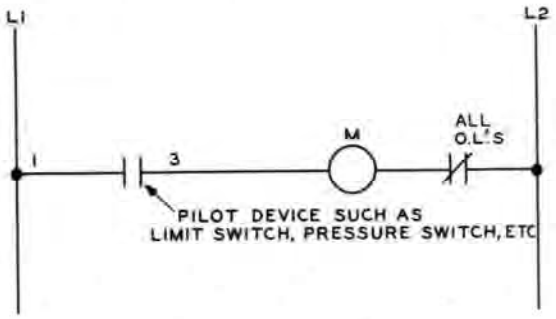

2

Low Voltage Protection is a "3 wire" control scheme using momentary contact push buttons or similar pilot devices to energize the starter coil. This scheme is used to prevent the unexpected starting of motors which could result in possible injury to machine operators or damage to driven machinery. The starter is energized by pressing the start button. An auxiliary "holding circuit" interlock on the starter forms a parallel circuit around the start button contacts holding the starter in after the button is released. If a power failure occurs, the starter will drop out and will open the holding circuit interlock. Upon resumption of power, the start button **must** be operated again before the motor will restart. The term "3 wire" control arises from the fact that in the basic circuit at least three wires are required to connect the pilot devices to the starter.

3 WIRE CONTROL

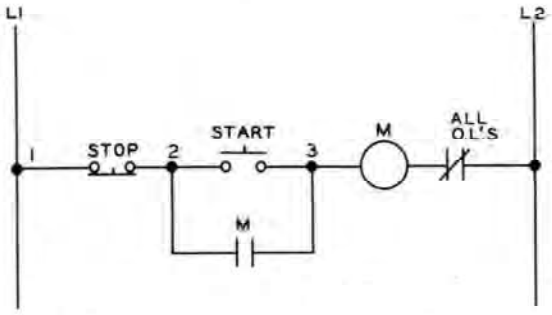

3

2 WIRE CONTROL - WITH MAINTAINED CONTACT HAND-OFF-AUTO SELECTOR SWITCH

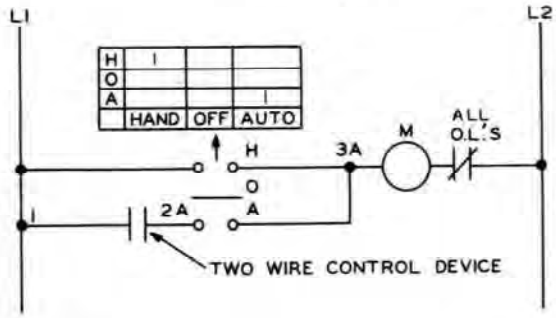

A "Hand-Off-Auto" selector switch is used on two wire control applications where it is desirable to operate the starter manually as well as automatically. The starter coil is energized manually when the switch is turned to the "Hand" position, and is energized automatically by the pilot device when the switch is in the "Auto" position.

4

3 WIRE CONTROL – MOMENTARY CONTACT MULTIPLE PUSH BUTTON STATION

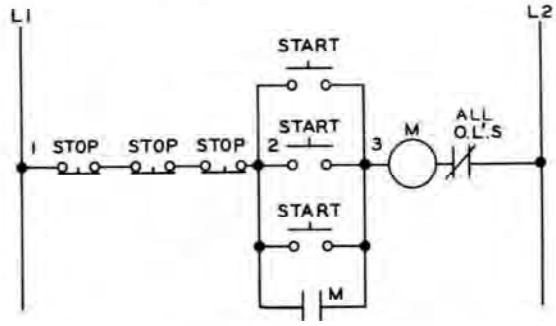

When a motor must be started and stopped from more than one location, any number of "Start" and "Stop" push buttons may be wired together as required. It is also possible to use only one "Start-Stop" station and have several "Stop" buttons at different locations to serve as emergency stop.

EXAMPLES OF CONTROL CIRCUITS – ELEMENTARY DIAGRAMS

1

3 WIRE CONTROL WITH PILOT LIGHT TO INDICATE WHEN MOTOR IS RUNNING

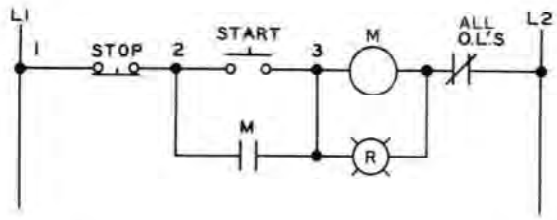

A pilot light can be wired in parallel with the starter coil to indicate when the starter is energized and thus show that the motor is running.

2

3 WIRE CONTROL WITH PILOT LIGHT TO INDICATE WHEN MOTOR IS STOPPED

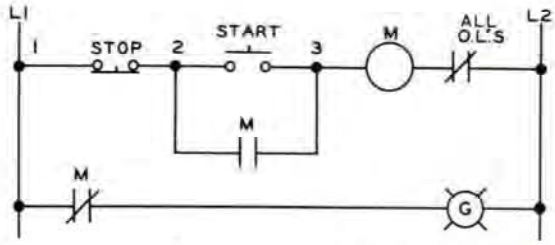

A pilot light may be required to indicate when the motor is stopped. This can be done by wiring a normally closed auxiliary contact on the starter in series with the pilot light as shown. When the starter is deenergized, the pilot light is on. When the starter picks up, the auxiliary contact opens, turning off the light.

3

3 WIRE CONTROL WITH PUSH-TO-TEST PILOT LIGHT TO INDICATE WHEN MOTOR IS RUNNING

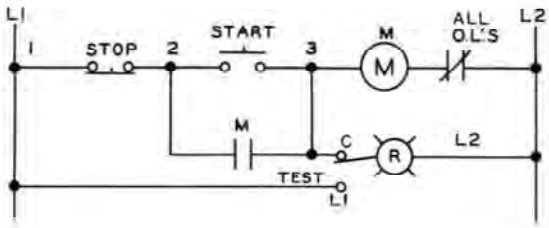

When the motor running pilot light is not lit, there may be doubt as to whether the circuit is open or whether the pilot light bulb is burned out. The push-to-test pilot light enables the testing of the bulb simply by pushing on the color cap.

4

3 WIRE CONTROL WITH ILLUMINATED PUSH BUTTON TO INDICATE WHEN MOTOR IS RUNNING

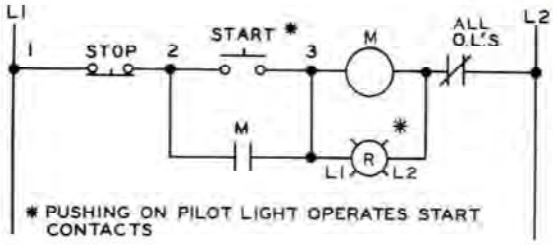

The illuminated push button combines a start button and a pilot light in one unit. Pressing the pilot light lens operates the start contacts. Space is saved by requiring only a two unit push button station instead of three.

3 WIRE CONTROL WITH FUSED CONTROL CIRCUIT TRANSFORMER

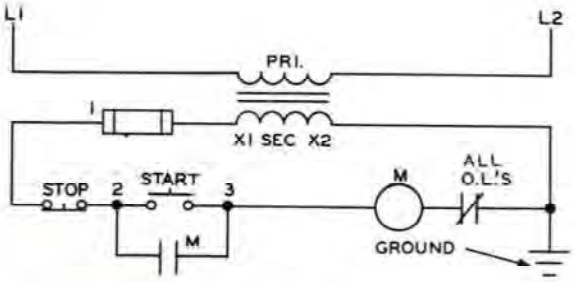

A step down transformer can be used to provide a control circuit voltage lower than line voltage for reasons of operator safety. This scheme shows one of the ways overcurrent protection can be provided for control circuits. For others, see page 9.

6

3 WIRE CONTROL WITH FUSED CONTROL CIRCUIT TRANSFORMER AND CONTROL RELAY

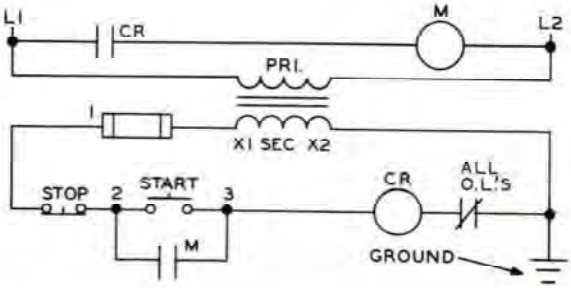

A starter coil with a high volt-ampere rating may require a control transformer of considerable size. A control relay and a transformer with a low VA rating can be connected so that the normally open relay contact controls the starter coil on the primary or line side. Square D Size 5 Form FT starters use this scheme.

EXAMPLES OF CONTROL CIRCUITS – ELEMENTARY DIAGRAMS

1

JOGGING USING A SELECTOR SWITCH – JOG WITH START BUTTON

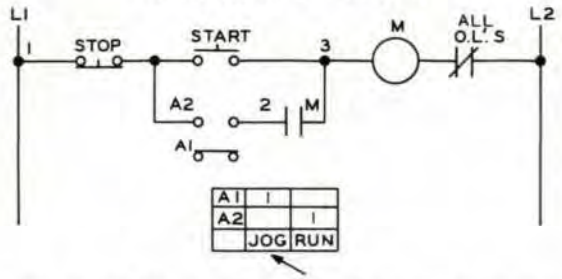

Jogging, or inching, is defined by NEMA as the momentary operation of a motor from rest for the purpose of accomplishing small movements of the driven machine. One method of jogging is shown above. The selector switch disconnects the holding circuit interlock and jogging may be accomplished by pressing the "Start" button.

2

JOGGING USING A SELECTOR PUSH BUTTON

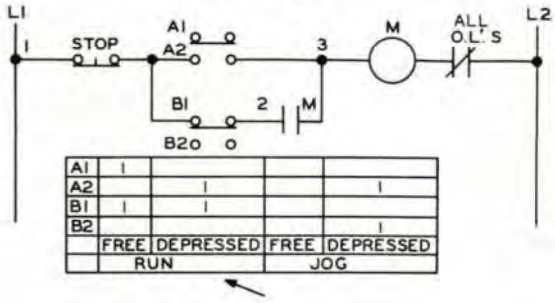

The use of a selector push button to obtain jogging is shown above. In the "Run" position the selector-push button gives normal 3 wire control. In the "Jog" position, the holding circuit is broken and jogging is accomplished by depressing the button.

3

JOGGING USING A CONTROL RELAY

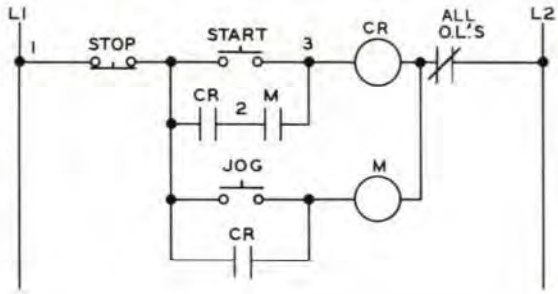

Pressing the "Start" button energizes the control relay which in turn energizes the starter coil. The normally open starter interlock and relay contact then form a holding circuit around the "Start" button. Pressing the "Jog" button energizes the starter coil independent of the relay and no holding circuit forms, thus jogging can be obtained.

4

JOGGING USING A CONTROL RELAY FOR REVERSING STARTER

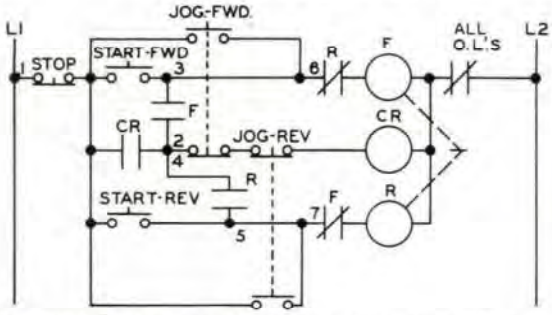

This control scheme permits jogging the motor either in the forward or reverse direction whether the motor is at standstill or is rotating in either direction. Pressing the "Start-Forward" or "Start-Reverse" buttons energizes the corresponding starter coil which closes the circuit to the control relay. The relay picks up and completes the holding circuit around the "Start" button. As long as the relay is energized either the forward or reverse contactor will remain energized. Pressing either "Jog" button will deenergize the relay releasing the closed contactor. Further pressing of the "Jog" button permits jogging in the desired direction.

5

3 WIRE CONTROL - MORE THAN ONE STARTER, ONE PUSH BUTTON STATION CONTROLS ALL

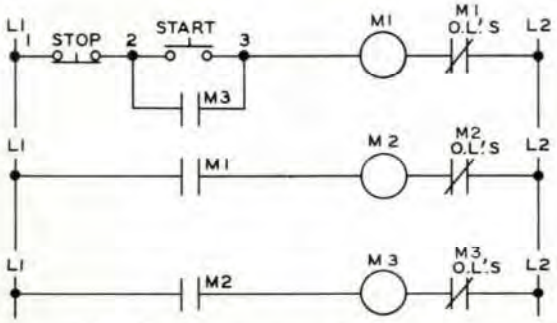

When one "Start-Stop" station is required to control more than one starter, the scheme above can be used. A maintained overload on any one of the motors will drop out all three starters.

6

3 WIRE CONTROL - REVERSING STARTER

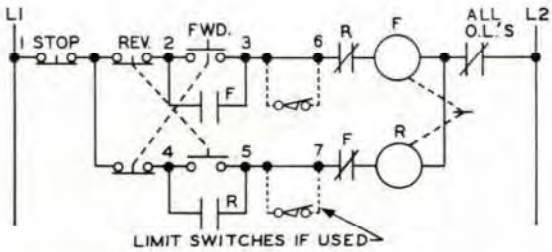

3 wire control of a reversing starter can be accomplished with a "Forward-Reverse-Stop" push button station as shown above. Limit switches can be added to stop the motor at a certain point in either direction. Jumpers 6 to 3 and 7 to 5 must then be removed.

EXAMPLES OF CONTROL CIRCUITS – ELEMENTARY DIAGRAMS

1

3 WIRE CONTROL - REVERSING STARTER MULTIPLE PUSH BUTTON STATION

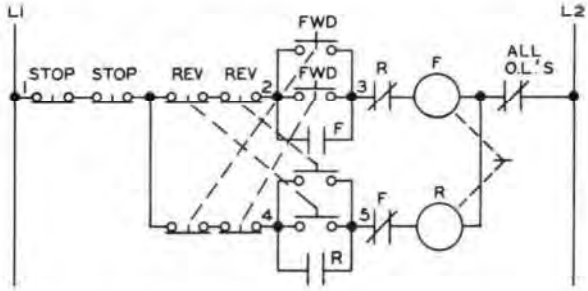

More than one "Forward-Reverse-Stop" push button station may be required and can be connected in the manner shown above.

2

3 WIRE CONTROL - REVERSING STARTER WITH PILOT LIGHTS TO INDICATE DIRECTION MOTOR IS RUNNING

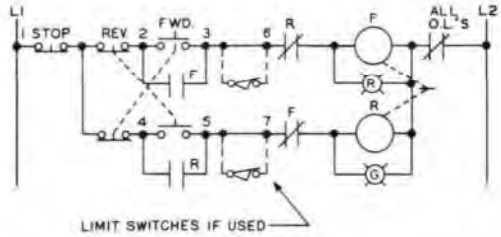

Pilot lights can be connected in parallel with the forward and reverse contactor coils to indicate which contactor is energized and thus which direction the motor is running.

3

3 WIRE CONTROL - TWO SPEED STARTER

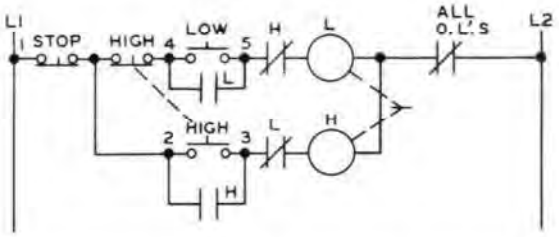

3 wire control of a two speed starter with a "High-Low-Stop" push button station is shown above. This scheme allows the operator to start the motor from rest at either speed or to change from low to high speed. The "Stop" button must be operated before it is possible to change from high to low speed. This arrangement is intended to prevent excessive line current and shock to motor and driven machinery which results when motors running at high speed are reconnected for a lower speed.

4

3 WIRE CONTROL - TWO SPEED STARTER WITH ONE PILOT LIGHT TO INDICATE MOTOR OPERATION AT EACH SPEED

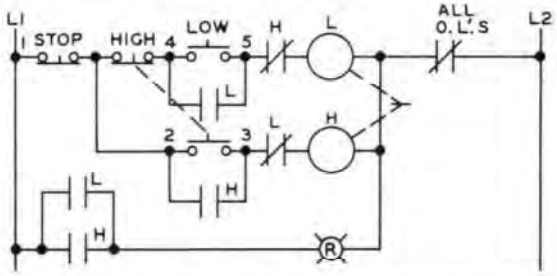

One pilot light can be used to indicate operation at both low and high speeds. One extra normally open interlock on each contactor is required. Two pilot lights, one for each speed, could be used by connecting pilot lights in parallel with high and low coils. (See Reversing Starter diagram above.)

5

PLUGGING A MOTOR TO A STOP FROM ONE DIRECTION ONLY

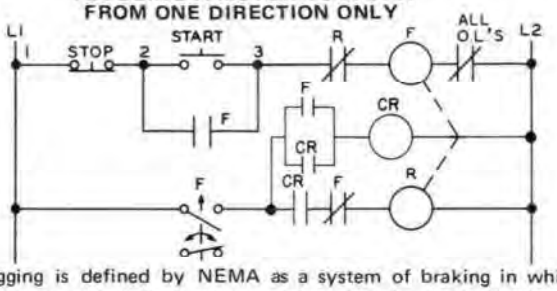

Plugging is defined by NEMA as a system of braking in which the motor connections are reversed so that the motor develops a counter torque, thus exerting a retarding force. In the above scheme the forward rotation of the motor closes the normally open plugging switch contact and energizing control relay CR. When the "Stop" button is operated the forward contactor drops out, the reverse contactor is energized through the plugging switch, the control relay contact as well as the normally closed forward interlock. This reverses the motor connections and the motor is braked to a stop. The plugging switch then opens and disconnects the reverse contactor, the control relay drops out as well. The control relay makes it impossible for the motor to be plugged in reverse by rotating the motor rotor closing the plugging switch. This type of control is used for plugging and not for running in reverse.

6

ANTI-PLUGGING - MOTOR TO BE REVERSED BUT MUST NOT BE PLUGGED

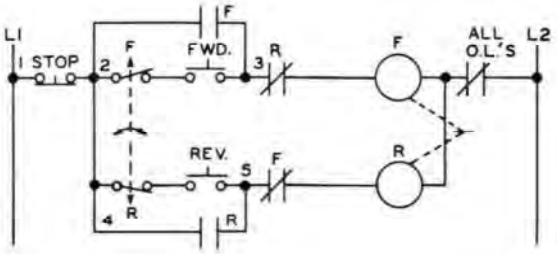

Anti-plugging protection is defined by NEMA as the effect of a device which operates to prevent application of counter-torque by the motor until the motor speed has been reduced to an acceptable value. In the scheme above, with the motor operating in one direction, a contact on the anti-plugging switch opens the control circuit of the contactor used for the opposite direction. This contact will not close until the motor has slowed down, after which the other contactor can be energized.

EXAMPLES OF OVERCURRENT PROTECTION FOR CONTROL CIRCUITS

(Some of these schemes may be required by applicable electrical codes)

1

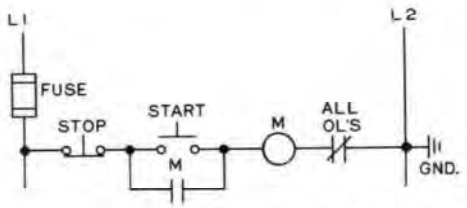

Common control with fusing in one line only and with both lines ungrounded or, if user's conditions permit, with one line grounded.

2

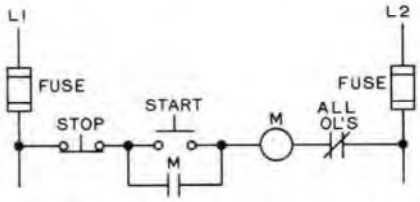

Common control with fusing in both lines and with both lines ungrounded.

3

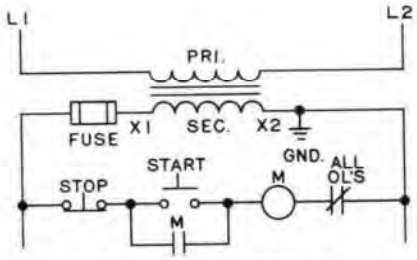

Control circuit transformer with fusing in one secondary line and with both secondary lines ungrounded or, if user's conditions permit, with one line grounded.

4

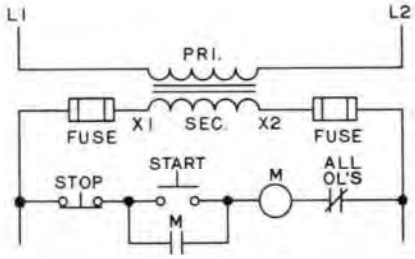

Control circuit transformer with fusing in both secondary lines and with both secondary lines ungrounded.

5

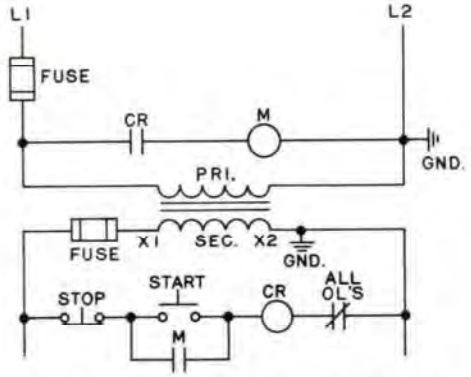

Control circuit transformer with fusing in one primary and one secondary line, and with all lines ungrounded, or, if user's conditions permit, with one primary and one secondary line grounded.

6

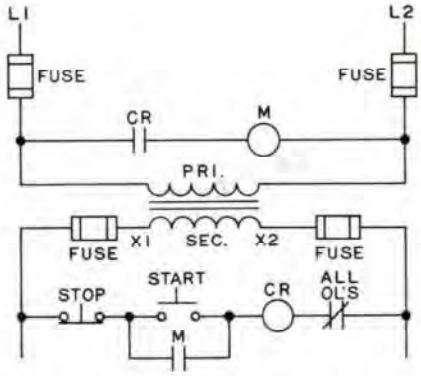

Control circuit transformer with fusing in both primary lines and both secondary lines and with all lines ungrounded.

7

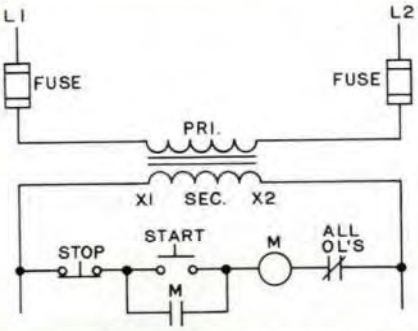

Control circuit transformer with fusing in both primary lines, with no secondary fusing and with all lines ungrounded.

AC MANUAL STARTERS AND MANUAL MOTOR STARTING SWITCHES

MANUAL MOTOR STARTING SWITCHES – TYPE K

1

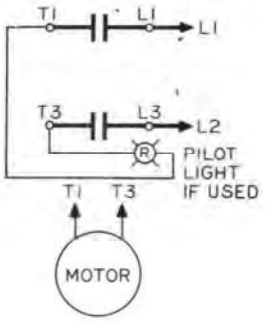

2 Pole, 1 Phase

2

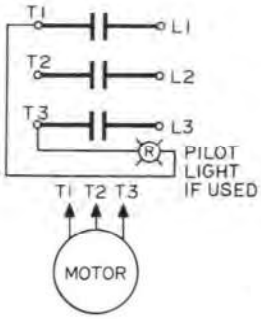

3 Pole, 3 Phase

FRACTIONAL HORSEPOWER MANUAL STARTERS - TYPE F

3

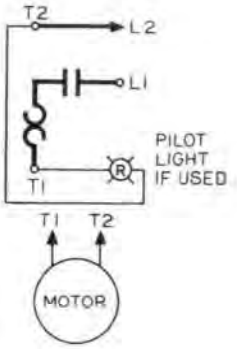

1 Pole

4

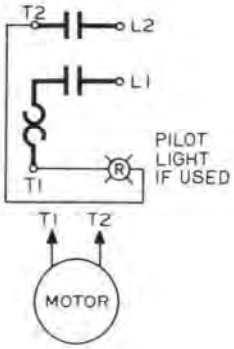

2 Pole

5

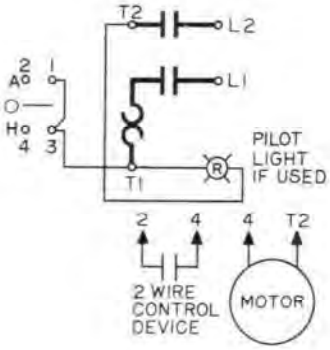

2 Pole with Selector Switch

INTEGRAL HORSEPOWER MANUAL STARTERS - SIZES M-0 AND M-1

6

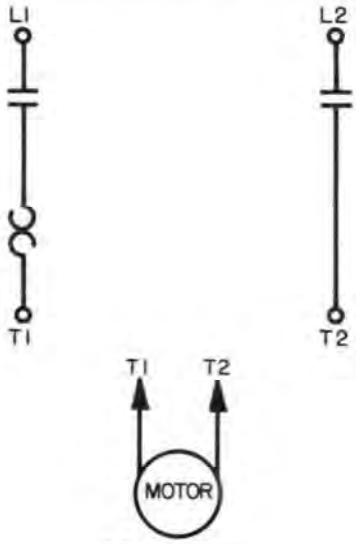

2 Pole, 1 Phase

7

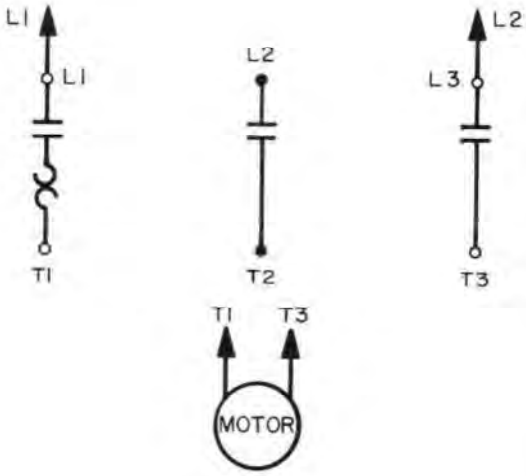

3 Pole 1 Phase

AC MANUAL STARTERS

CLASS 2510

INTEGRAL HORSEPOWER MANUAL STARTERS - SIZES M-0 AND M-1

1

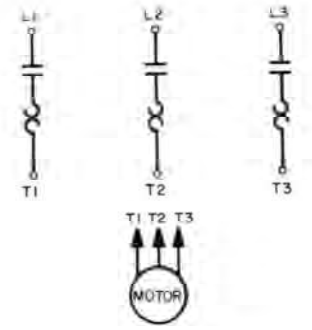

3 Pole, 3 Phase

2

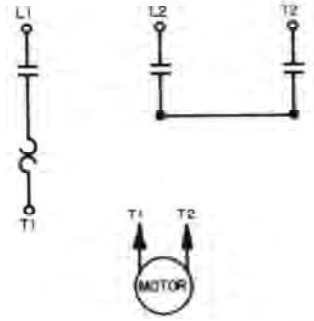

3 Pole, Direct Current

3

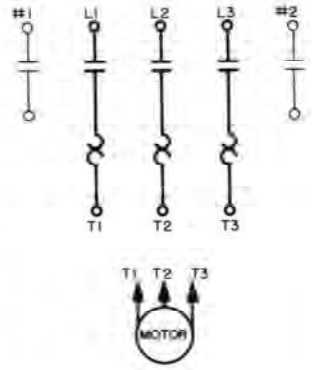

3 Pole, 3 Phase with Two Additional Interlocks (Form X)

AC REVERSING MANUAL STARTERS AND MANUAL MOTOR STARTING SWITCHES

CLASS 2511

4

REVERSING MANUAL MOTOR STARTING SWITCH

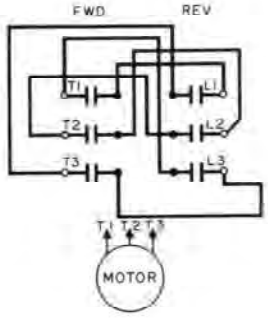

Type K, 3 Pole, 3 Phase

5

REVERSING MANUAL STARTER

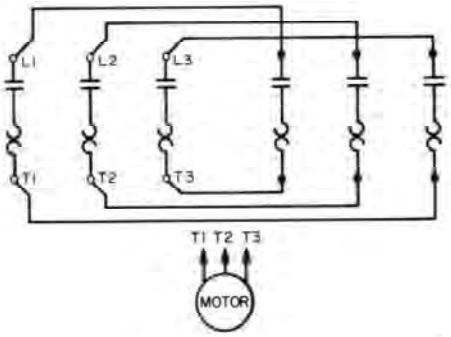

Sizes M-0 and M-1, 3 Pole, 3 Phase

AC TWO SPEED MANUAL STARTERS AND MANUAL MOTOR STARTING SWITCHES

CLASS 2512

6

TWO SPEED MANUAL MOTOR STARTING SWITCH - TYPE K

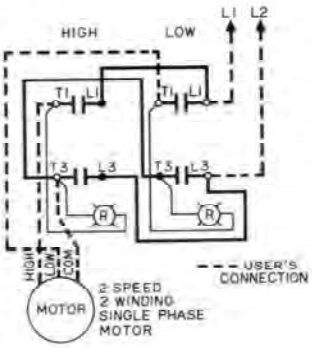

2 Pole, Single Phase with Pilot Light

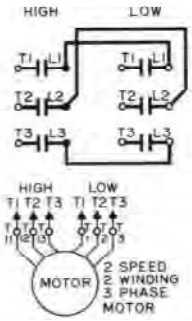

3 Pole, 3 Phase

CLASS 2512

AC TWO SPEED MANUAL STARTERS

1

TWO SPEED MANUAL MOTOR STARTERS - TYPE F

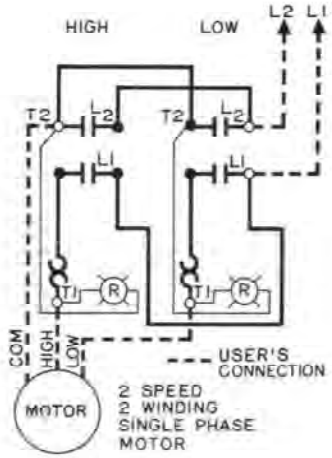

2 Unit - 2 Pole with
Mechanical Interlock and Pilot Lights

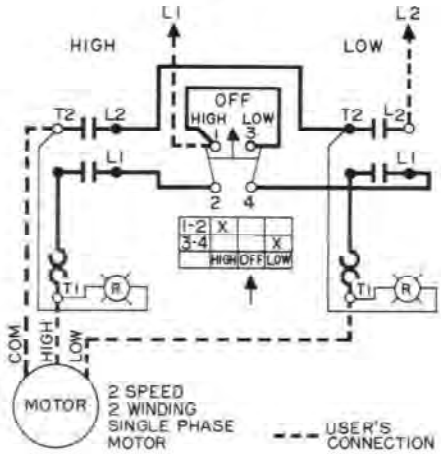

3 Unit - 2 Pole with
Selector Switch and Pilot Lights

2

SIZES M-0 AND M-1 - TWO SPEED MANUAL STARTERS

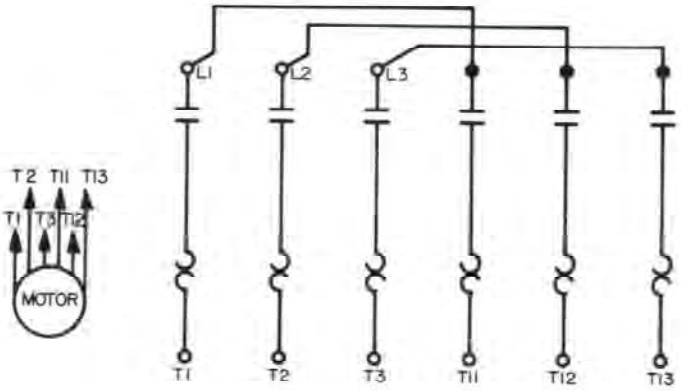

Two Speed Starter
For Wye Connected
Separate Winding Motor

CLASS 2601

DRUM SWITCHES

3

HANDLE END

FORWARD	OFF	REVERSE
1 o——o 2	1 o o 2	1 o o 2
3 o——o 4	3 o o 4	3 o o 4
5 o——o 6	5 o o 6	5 o——o 6

Internal Switching

4

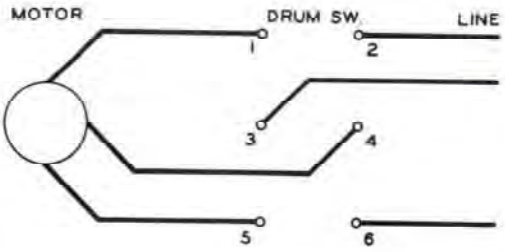

3 Phase - 3 Wire Motor

1

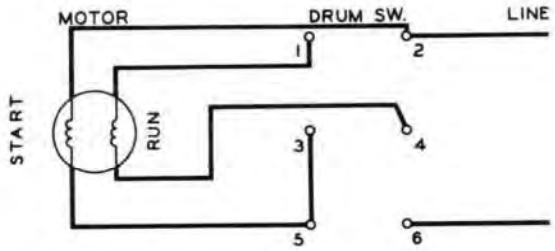

Single Phase—Capacitor or Split Phase Motor

2

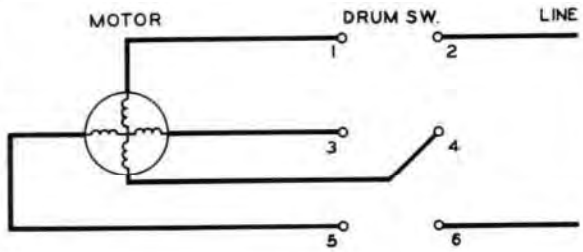

Single Phase—4 Lead Repulsion Induction Motor

3

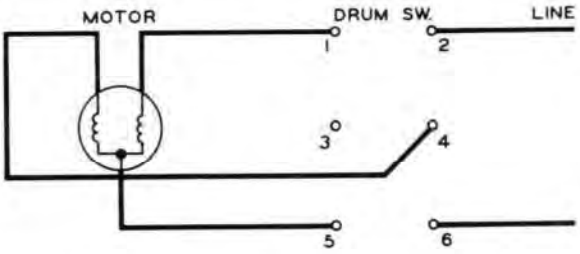

Single Phase—3 Lead Repulsion Induction Motor

4

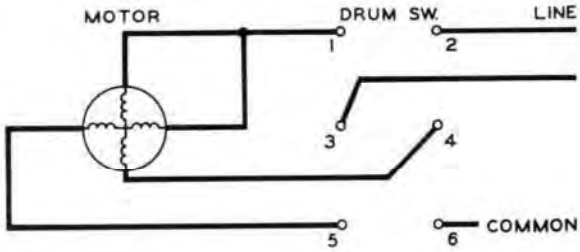

2 Phase - 3 Wire Motor

5

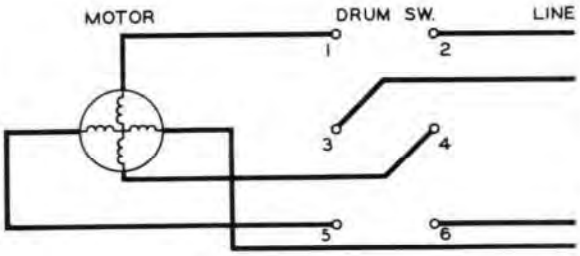

2 Phase - 4 Wire Motor

6

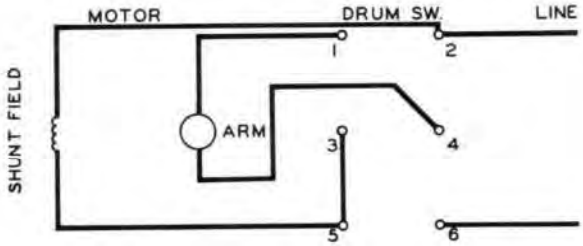

Direct Current - Shunt Motor

7

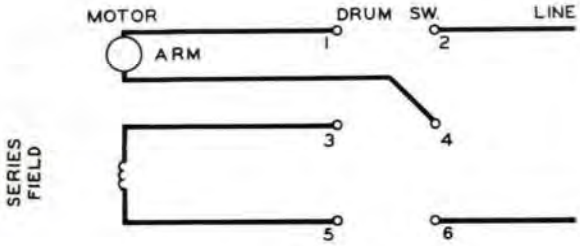

Direct Current - Series Motor

8

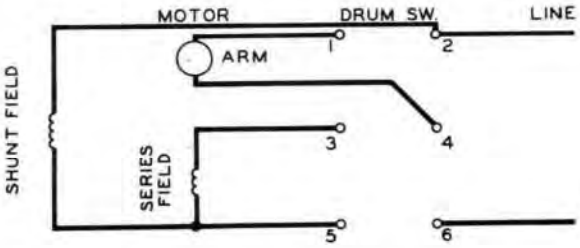

Direct Current - Compound Motor

CLASS 7135 CONSTANT SPEED, DC STARTER

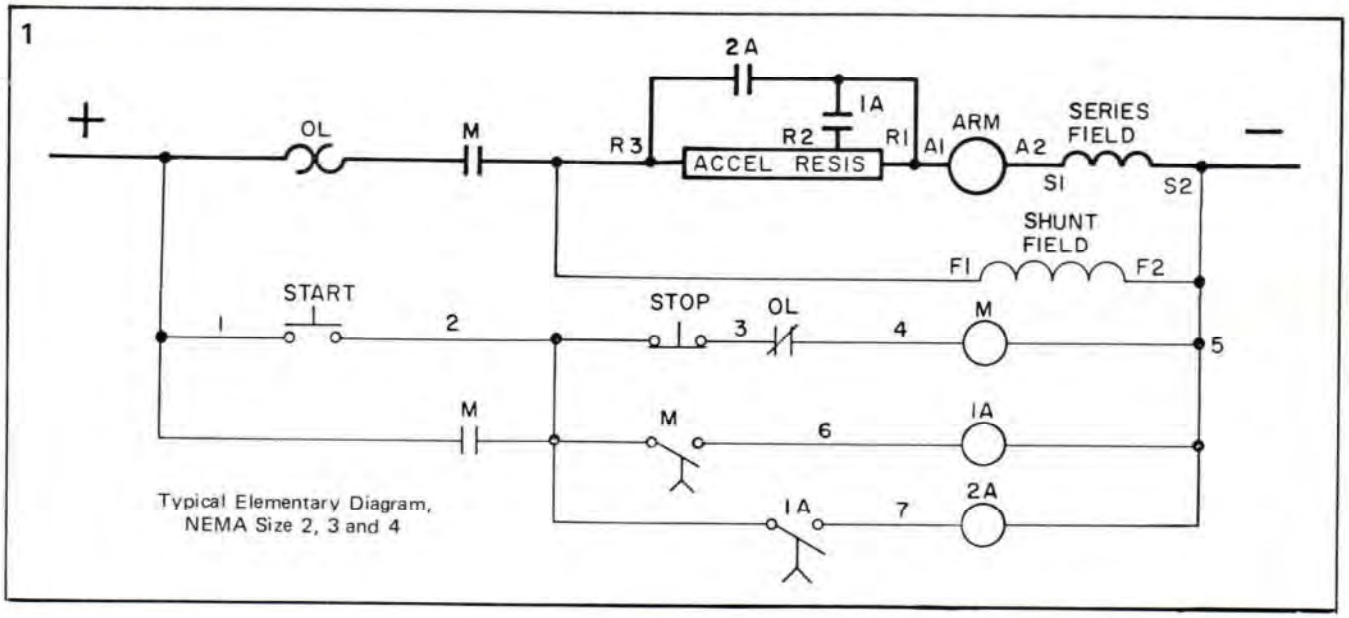

CLASS 7136 ADJUSTABLE SPEED, DC STARTER

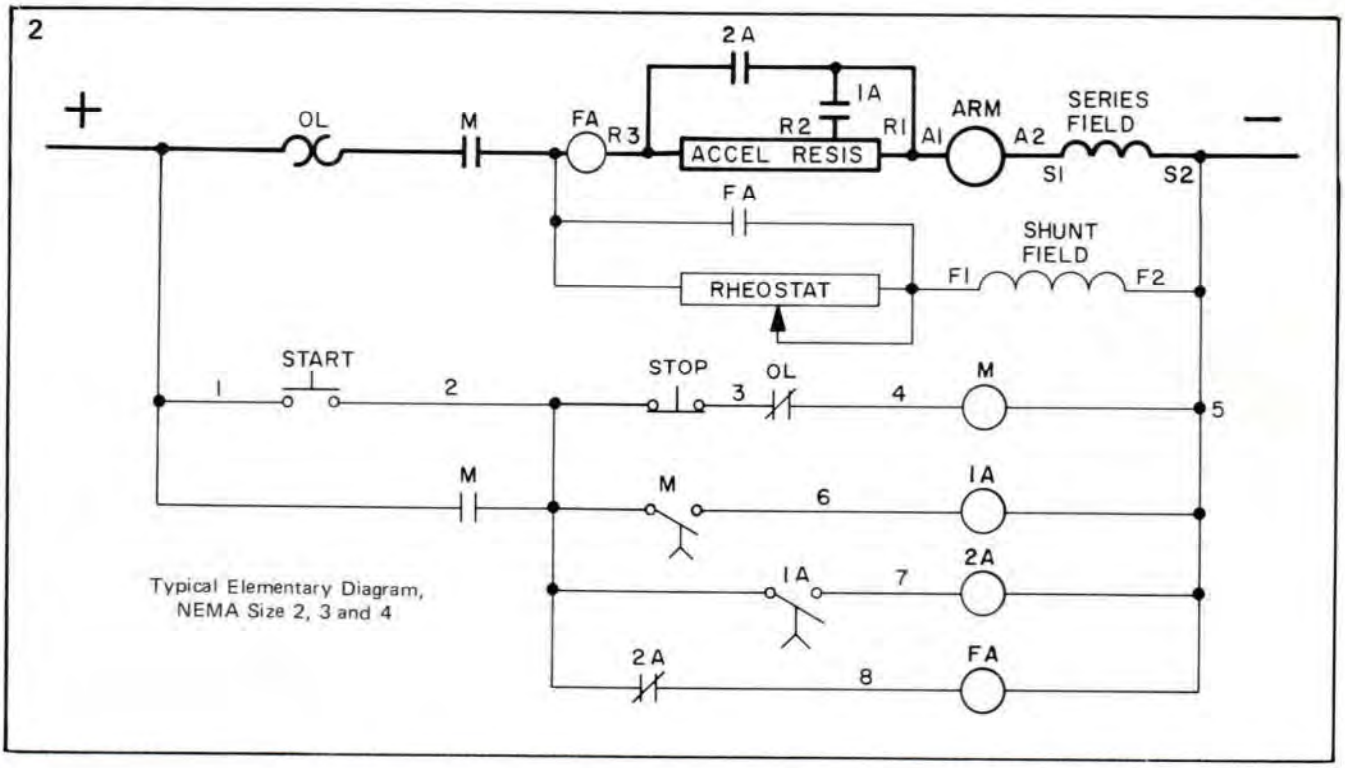

ACCELERATION CONTACTORS
CLASS 7135, 7136, 7735, 7736

NEMA Size	1	2	3	4	5
Number of accel. contactors	1	2	2	2	3

REVERSING CONSTANT SPEED, DC STARTER

CLASS 7735

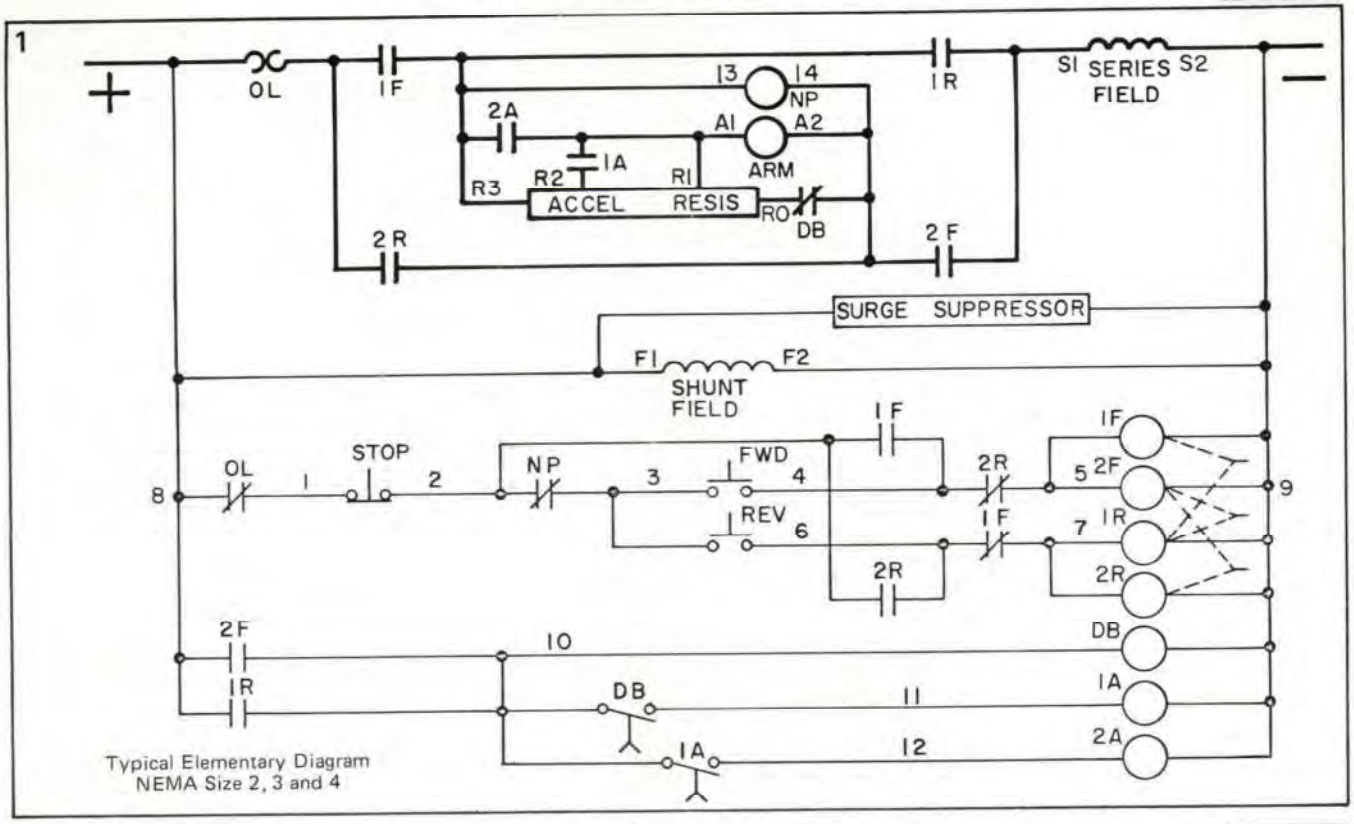

Typical Elementary Diagram
NEMA Size 2, 3 and 4

REVERSING ADJUSTABLE SPEED, DC STARTER

CLASS 7736

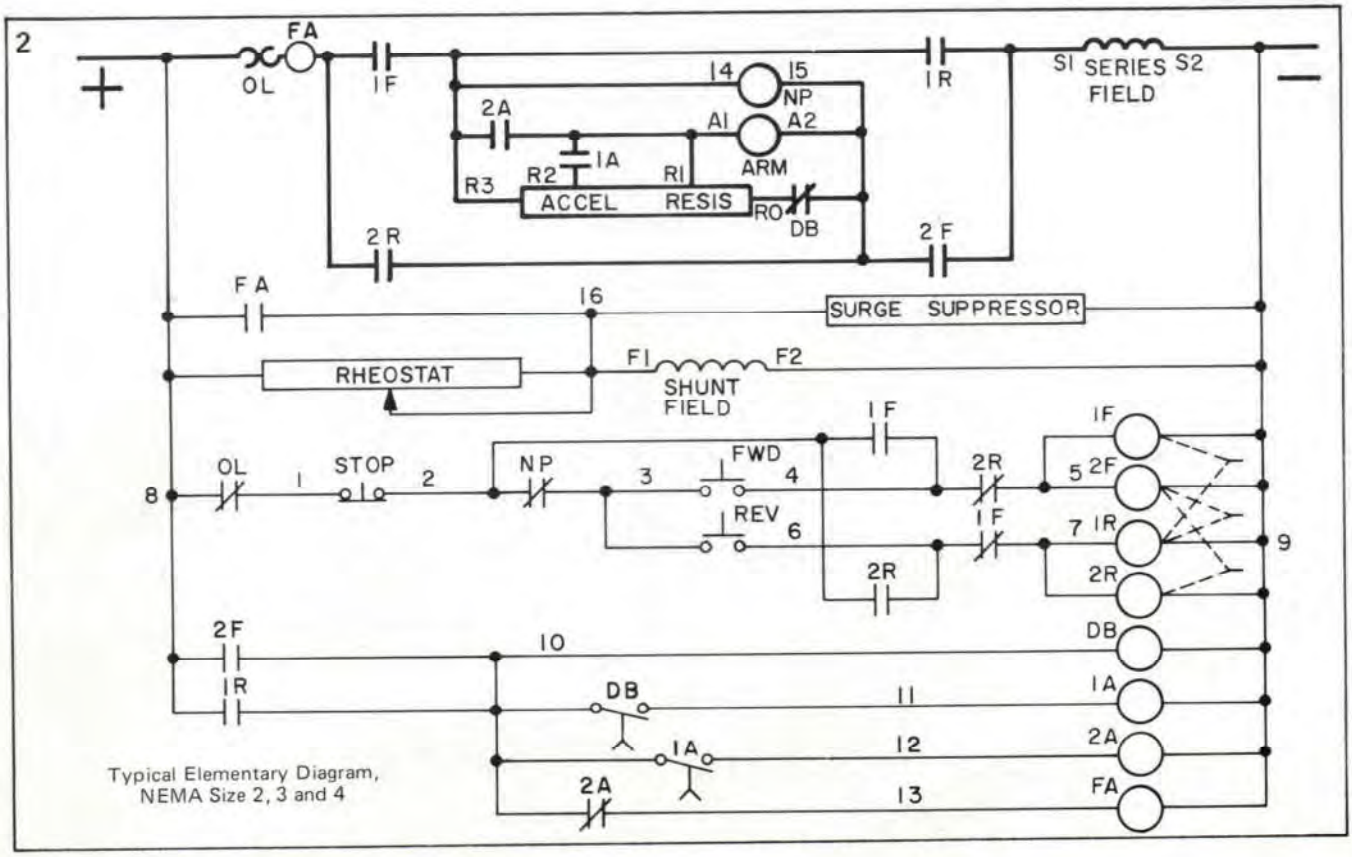

Typical Elementary Diagram,
NEMA Size 2, 3 and 4

HIGH VOLTAGE MOTOR STARTERS

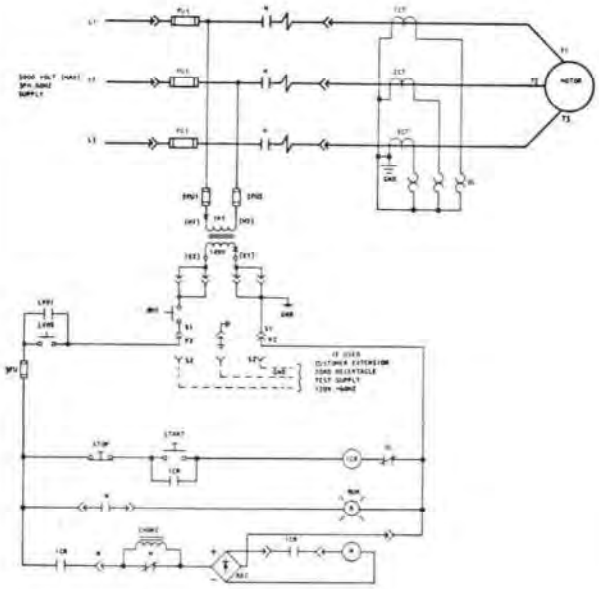

Type FC-11, FC-21, FC-13, FC-23, FC-12 or FC-22
Full Voltage, Non-Reversing Squirrel Cage Motor Starter.

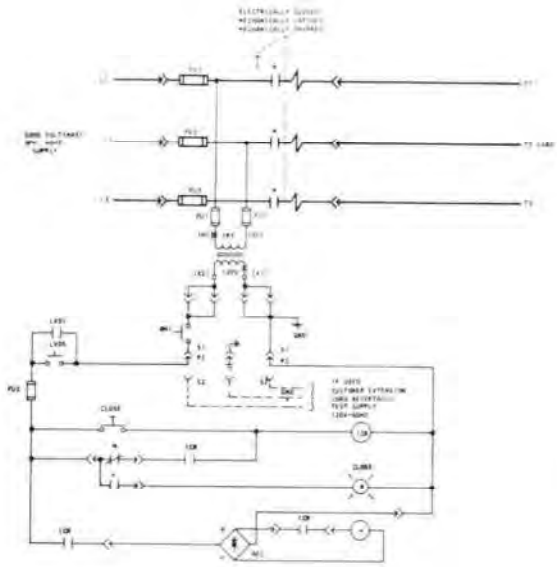

Type FL-13, FL-23, FL-12 or FL-22
Mechanical Latched Contactor

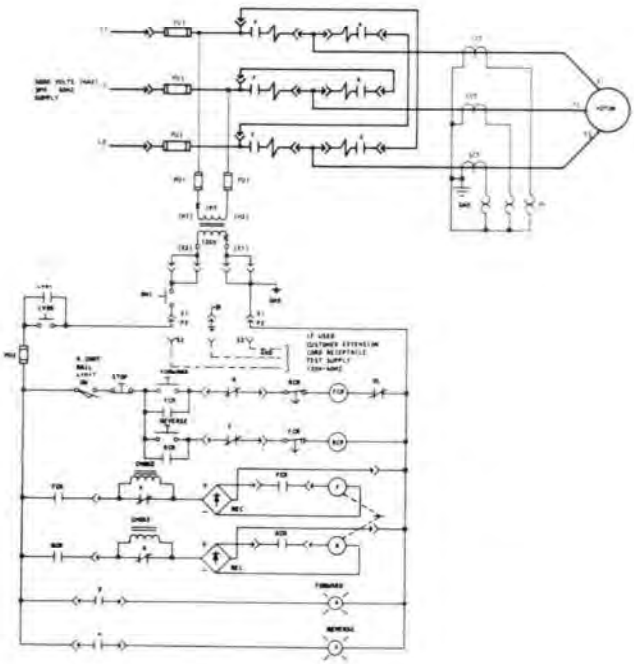

Type FCR-1 or FCR-2 Reversing Full Voltage Squirrel Cage Motor Starter.

1

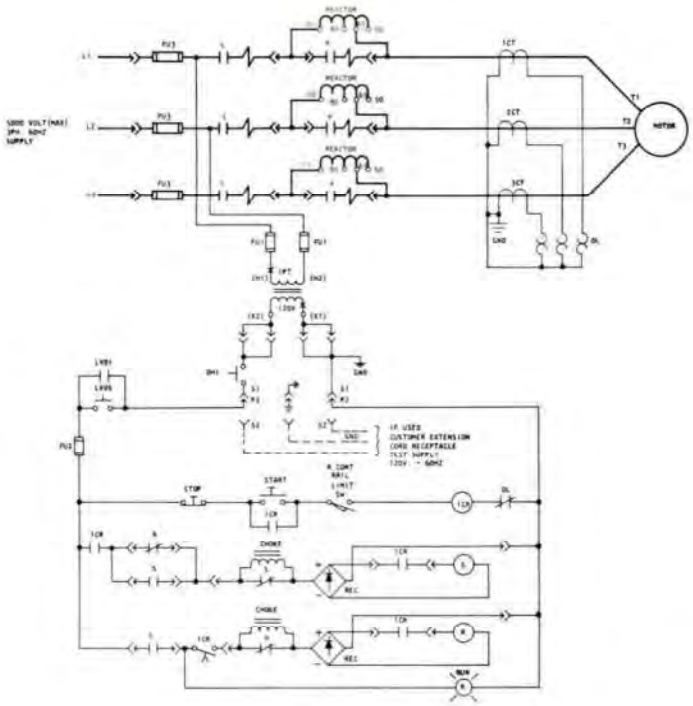

Type RCR-1 or RCR-2 Reduced Voltage, Primary Reactor, Non-Reversing Squirrel Cage Motor Starter.

2

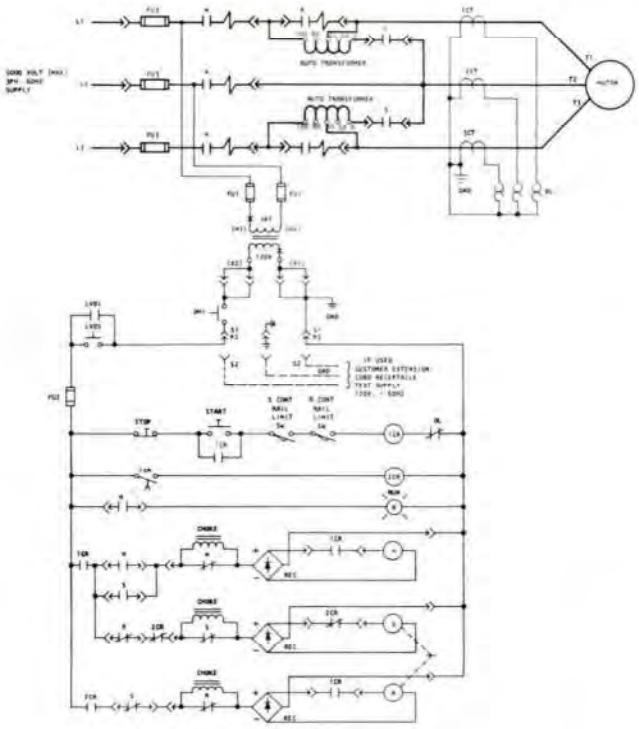

Type RCA-1 or RCA-2 Reduced Voltage, Autotransformer Non-Reversing Squirrel Cage Motor Starter.

HIGH VOLTAGE MOTOR STARTERS

1

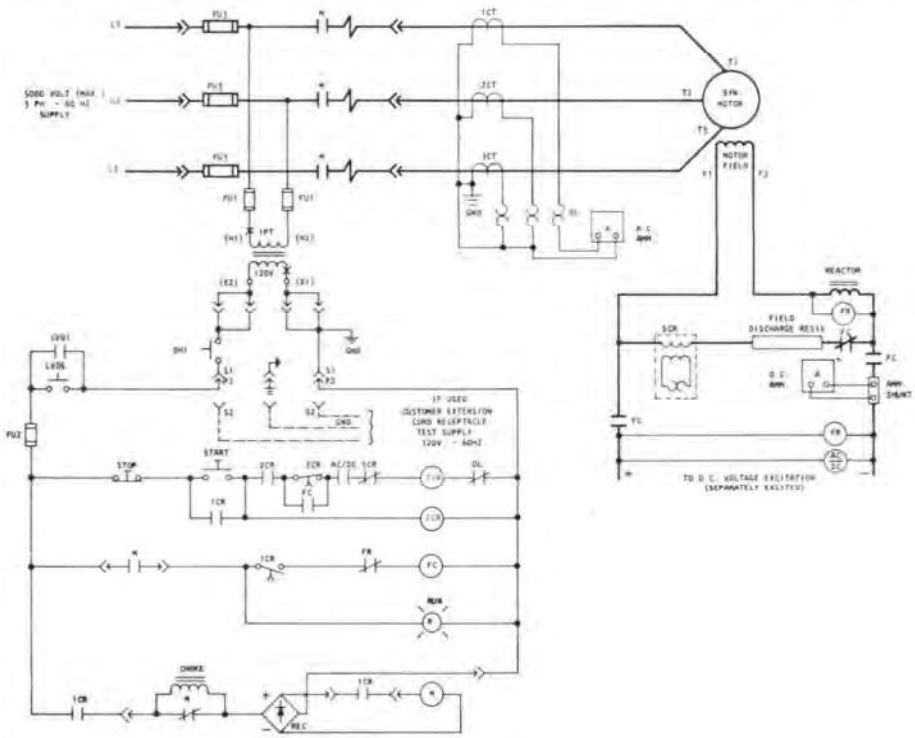

Type FS-1 or FS-2 Full Voltage, Non-Reversing Synchronous Motor Starter.

2

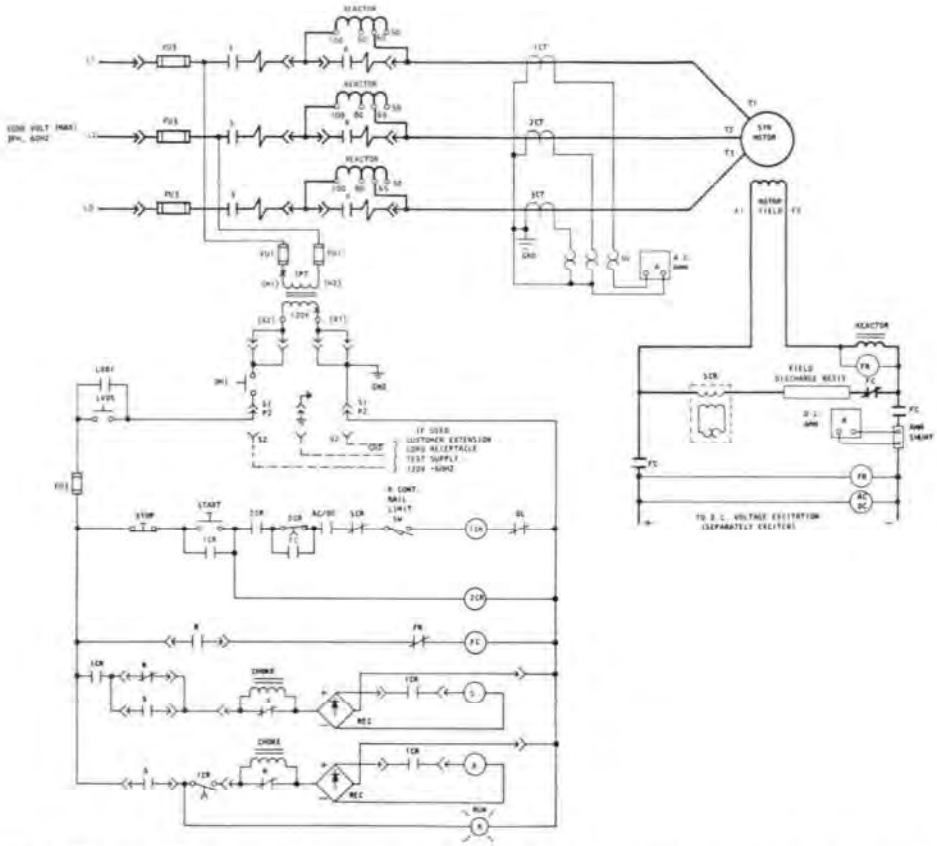

Type RSR-1 or RSR-2 Reduced Voltage Primary Reactor Non-Reversing Synchronous Motor Starter.

1

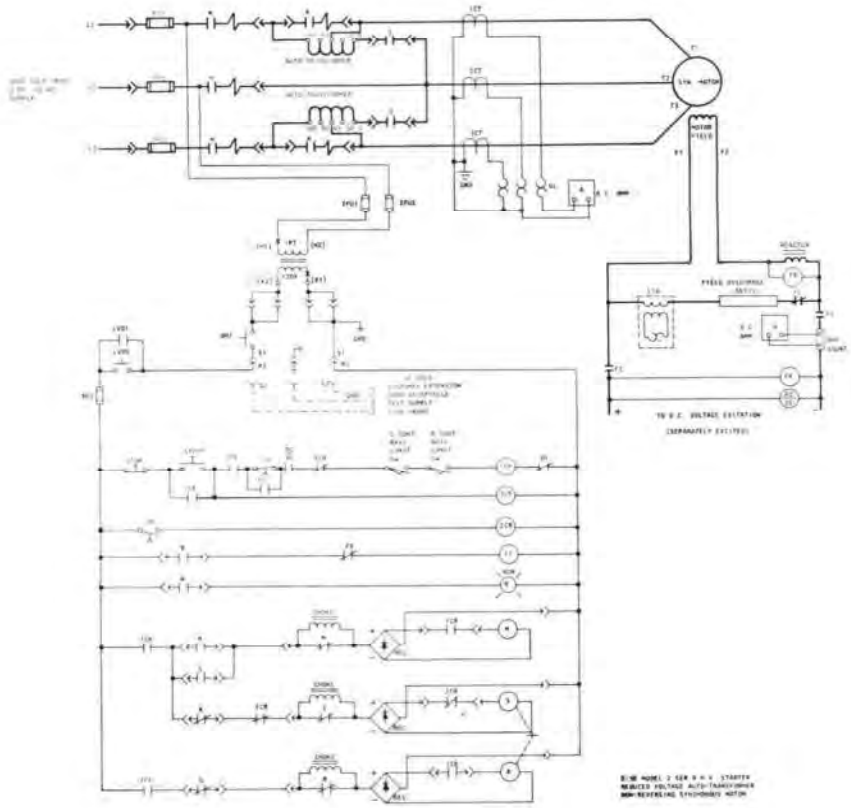

Type RSA-1 or RSA-2 Reduced Voltage Autotransformer Non-Reversing Synchronous Motor Starter.

2

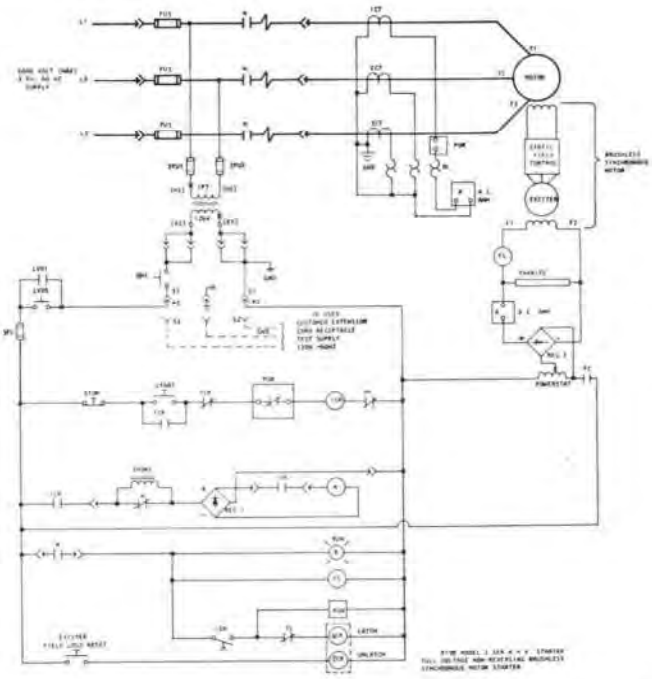

Type FSB-1 or FSB-2 Full Voltage Non-Reversing Brushless Synchronous Motor Starter.

CONTROL RELAYS

1

TYPE C RELAY

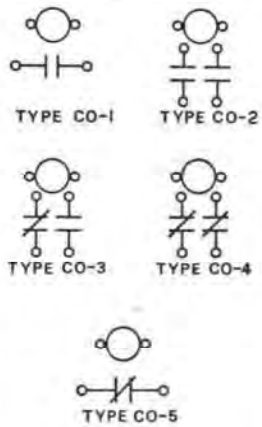

2

TYPE D, 10 AMPERE RELAY, FIXED CONTACTS

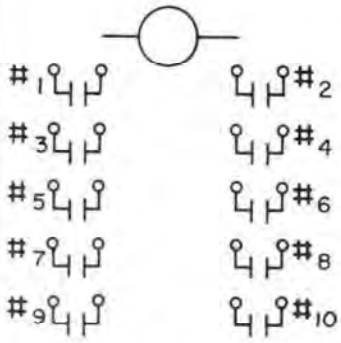

Type Number	Contact Number 1	2	3	4	5	6	7	8	9	10
DO-20	O	O								
DO-02			1	1						
DO-22	*O	*O	*1	*1						
DO-40	O	O	O	O						
DO-42	O	O	*O	*O	*1	*1				
DO-44	O	O	O	O			1	1	1	1
DO-60	O	O			O	O			O	O
DO-62	O	O	O	O	O	O			1	1
DO-64	O	O	O	O	*O	*O	*1	*1	1	1
DO-80	O	O	O	O	O	O			O	O
DO-82	O	O	O	O	*O	*O	*1	*1	O	O

O—Normally Open Contact.
1—Normally Closed Contact.
*—Contacts of individual double throw poles must be used on the same polarity.

Note: Class 8508 Type D latching relays have same contact arrangements as shown at left except unlatch coil is added to diagram.

3

TYPE D RELAY OPERATED TIMER, FIXED CONTACTS

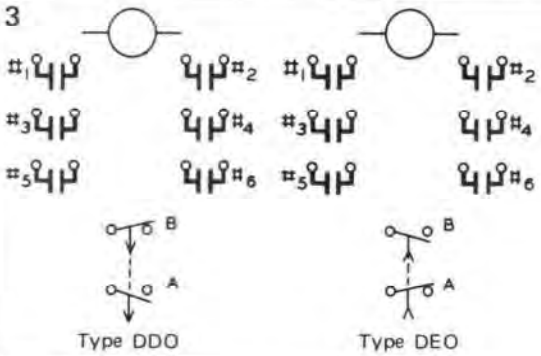

Type Number	Contact Number 1	2	3	4	5	6
DDO-22 DEO-22	*O	*O	*1	*1		
DDO-42 DEO-42	O	O	*O	*O	*1	*1

O—Normally Open Contact.
1—Normally Closed Contact.
*—Contacts of individual double throw poles must be used on the same polarity.

4

TYPE G, 10 AMPERE RELAY, CONVERTIBLE CONTACTS

2, 3 and 4 Pole Contact Arrangement

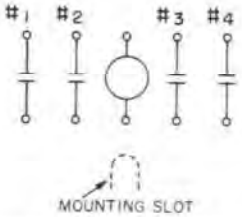

No. of Poles	Type	Contact Number 1	2	3	4
2	GO-20	O			O
	GO-11	O			1
	GO-02	1			1
3	GO-30	O		O	O
	GO-21	O		O	1
	GO-12	O		1	1
	GO-03	1		1	1
4	GO-40	O	O	O	O
	GO-31	O	O	O	1
	GO-22	O	O	1	1
	GO-13	O	1	1	1
	GO-04	1	1	1	1

Note: Class 8501 Type GO—GL latching relays have same contact arrangements as above except unlatch coil is added to diagram.

O—Normally Open Contact.
1—Normally Closed Contact.

6 and 8 Pole Contact Arrangement

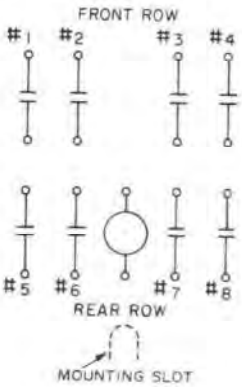

No. of Poles	Type	Contact Number 1 / 5	2 / 6	3 / 7	4 / 9
6	GO-60	O	O	O	O
		O			O
	GO-51	O	O	O	1
		O			O
	GO-42	O	O	1	1
		O			O
	GO-33	O	1	1	1
		O			O
	GO-24	1	1	1	1
		O			O
	GO-15	O	1	1	1
		1			1
	GO-06	1	1	1	1
		1			1
8	GO-80	O	O	O	O
		O	O	O	O
	GO-71	O	O	O	1
		O	O	O	O
	GO-62	O	O	1	1
		O	O	O	O
	GO-53	O	1	1	1
		O	O	O	O
	GO-44	1	1	1	1
		O	O	O	O
	GO-35	O	O	O	1
		1	1	1	1
	GO-26	O	O	1	1
		1	1	1	1
	GO-17	O	1	1	1
		1	1	1	1
	GO-08	1	1	1	1
		1	1	1	1

1

TYPE G, 10 AMPERE RELAY WITH UNIVERSAL POLE ATTACHMENT

8, 10 and 12 Pole Contact Arrangement

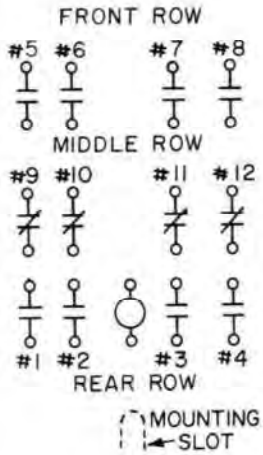

O—Normally Open Contact.
1—Normally Closed Contact.

*Poles 1, 2, 3 and 4 Convertible
Poles 5, 6, 7, 8, 9, 10, 11 and 12 non-convertible.

No. of Poles	Type	Contact Number *			
		5	6	7	8
		9	10	11	12
		1	2	3	4
8	GO-00-GU-44	O	O	O	O
		1	1	1	1
		-	-	-	-
10	GO-20-GU-44	O	O	O	O
		1	1	1	1
		O	-	-	O
	GO-11-GU-44	O	O	O	O
		1	1	1	1
		O	-	-	1
	GO-02-GU-44	O	O	O	O
		1	1	1	1
		1	-	-	1
12	GO-40-GU-44	O	O	O	O
		1	1	1	1
		O	O	O	O
	GO-31-GU-44	O	O	O	O
		1	1	1	1
		O	O	O	1
	GO-22-GU-44	O	O	O	O
		1	1	1	1
		O	O	1	1
	GO-13-GU-44	O	O	O	O
		1	1	1	1
		O	1	1	1
	GO-04-GU-44	O	O	O	O
		1	1	1	1
		1	1	1	1

2

TYPE G, RELAY OPERATED TIMER

Contact Arrangement

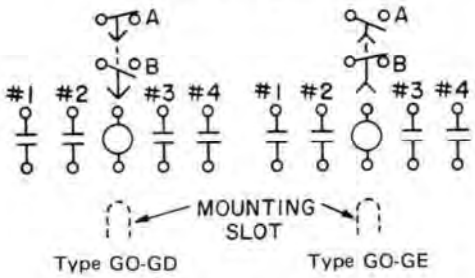

No. of Poles	Type	Contact Number			
		1	2	3	4
0	GO-00	-	-	-	-
2	GO-20	O	-	-	O
	GO-11	O	-	-	1
	GO-02	1	-	-	1
3	GO-30	O	-	O	O
	GO-21	O	-	O	1
	GO-12	O	-	1	1
	GO-03	1	-	1	1
4	GO-40	O	O	O	O
	GO-31	O	O	O	1
	GO-22	O	O	1	1
	GO-13	O	1	1	1
	GO-04	1	1	1	1

O—Normally Open Contact.
1—Normally Closed Contact.

3

TYPE H, 10 AMPERE AND TYPE HM, 20 AMPERE RELAY, CONVERTIBLE CONTACTS

2, 3 and 4 Pole Contact Arrangement

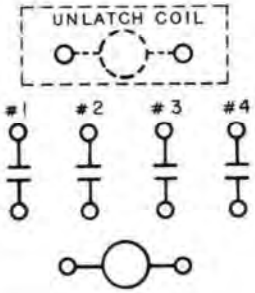

No. of Poles	Type	Contact Number			
		1	2	3	4
2	HO-20	O			O
	HO-11	O			1
	HO-02	1			1
3	HO-30	O	O		O
	HO-21	O	O		1
	HO-12	O	1		1
	HO-03	1	1		1
4	HO-40	O	O	O	O
	HO-31	O	O	O	1
	HO-22	O	O	1	1
	HO-13	O	1	1	1
	HO-04	1	1	1	1

O—Normally Open Contact.
1—Normally Closed Contact.

Note: Class 8501 Types HL and HML latching relays have the same contact arrangement as above except latching coil is added to diagram.

6 and 8 Pole Contact Arrangement

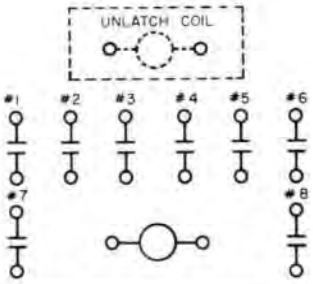

No. of Poles	Type	Contact Number							
		1	2	3	4	5	6	7	8
6	HO-60	O	O	O	O	O	O		
	HO-51	O	O	O	O	O	1		
	HO-42	O	O	O	O	1	1		
	HO-33	O	O	O	1	1	1		
	HO-24	O	O	1	1	1	1		
	HO-15	O	1	1	1	1	1		
	HO-06	1	1	1	1	1	1		
8	HO-80	O	O	O	O	O	O	O	O
	HO-71	O	O	O	O	O	O	O	1
	HO-62	O	O	O	O	O	O	1	1
	HO-53	O	O	O	O	O	1	1	1
	HO-44	O	O	O	O	1	1	1	1
	HO-35	O	O	O	1	1	1	1	1
	HO-26	O	O	1	1	1	1	1	1
	HO-17	O	1	1	1	1	1	1	1
	HO-08	1	1	1	1	1	1	1	1

CONTROL RELAYS

1

TYPE HX, 10 AMPERE AND TYPE HXM, 20 AMPERE RELAY, CONVERTIBLE CONTACTS

8, 10 and 12 Pole
Contact Arrangement

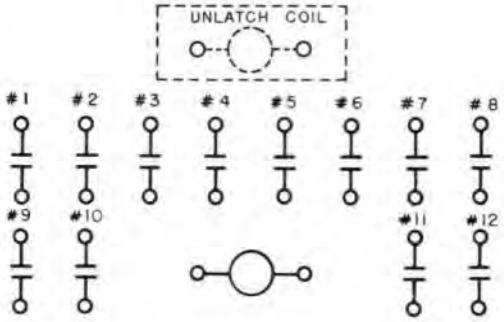

O—Normally Open Contact.
1—Normally Closed Contact.

Note: Class 8501 Types HXL and HXML latching relays have the same contact arrangement as above except latching coil is added to diagram.

No. of Poles	Type	Contact Number 1	2	3	4	5	6	7	8	9	10	11	12
8	HXO-80	O	O	O	O	O	O	O	O				
	HXO-71	O	O	O	O	O	O	O	1				
	HXO-82	O	O	O	O	O	O	1	1				
	HXO-53	O	O	O	O	O	1	1	1				
	HXO-44	O	O	O	O	1	1	1	1				
	HXO-35	O	O	O	1	1	1	1	1				
	HXO-26	O	O	1	1	1	1	1	1				
	HXO-17	O	1	1	1	1	1	1	1				
	HXO-08	1	1	1	1	1	1	1	1				
10	HXO-1000	O	O	O	O	O	O	O	O		O	O	
	HXO-901	O	O	O	O	O	O	O	O		O	1	
	HXO-802	O	O	O	O	O	O	O	O		1	1	
	HXO-703	O	O	O	O	O	O	O	1		1	1	
	HXO-604	O	O	O	O	O	O	1	1		1	1	
	HXO-505	O	O	O	O	O	1	1	1		1	1	
	HXO-406	O	O	O	O	1	1	1	1		1	1	
	HXO-307	O	O	O	1	1	1	1	1		1	1	
	HXO-208	O	O	1	1	1	1	1	1		1	1	
	HXO-109	O	1	1	1	1	1	1	1		1	1	
	HXO-010	1	1	1	1	1	1	1	1		1	1	
12	HXO-1200	O	O	O	O	O	O	O	O	O	O	O	O
	HXO-1101	O	O	O	O	O	O	O	O	O	O	O	1
	HXO-1002	O	O	O	O	O	O	O	O	1	O	O	1
	HXO-903	O	O	O	O	O	O	O	O	1	O	1	1
	HXO-804	O	O	O	O	O	O	O	O	1	1	1	1
	HXO-705	O	O	O	O	O	O	O	1	1	1	1	1
	HXO-606	O	O	O	O	O	O	1	1	1	1	1	1
	HXO-507	O	O	O	O	O	1	1	1	1	1	1	1
	HXO-408	O	O	O	O	1	1	1	1	1	1	1	1
	HXO-309	O	O	O	1	1	1	1	1	1	1	1	1
	HXO-210	O	O	1	1	1	1	1	1	1	1	1	1
	HXO-111	O	1	1	1	1	1	1	1	1	1	1	1
	HXO-012	1	1	1	1	1	1	1	1	1	1	1	1

2

TYPE H, 10 AMPERE AND TYPE HM, 20 AMPERE FORM Y165 (WITH HTE-1 COIL◒) TDE RELAY, CONVERTIBLE CONTACTS

2, 3 and 4 Pole
Contact Arrangement

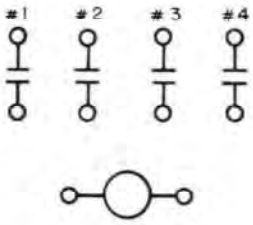

◒—All contacts are time delay after energization.
O—Normally Open Contact.
1—Normally Closed Contact.

No. of Poles	Type	Contact Number 1	2	3	4
2	HO-20	O			O
	HO-11	O			1
	HO-02	1			1
3	HO-30	O	O		O
	HO-21	O	O		1
	HO-12	O	1		1
	HO-03	1	1		1
4	HO-40	O	O	O	O
	HO-31	O	O	O	1
	HO-22	O	O	1	1
	HO-13	O	1	1	1
	HO-04	1	1	1	1

3

TYPE HD, 10 AMPERE AND TYPE HMD, 20 AMPERE DC RELAY, CONVERTIBLE CONTACTS

2 and 3 Pole
Contact Arrangement

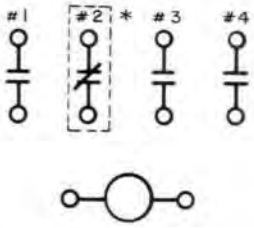

*—Not available for use, economizing coil contact.
O—Normally Open Contact.
1—Normally Closed Contact.

No. of Poles	Type	Contact Number 1	2	3	4
2	HDO-20	O	*		O
	HDO-11	O	*		1
	HDO-02	1	*		1
3	HDO-30	O	*	O	O
	HDO-21	O	*	O	1
	HDO-12	O	*	1	1
	HDO-03	1	*	1	1

1

TYPE HD, 10 AMPERE AND TYPE HMD, 20 AMPERE DC RELAY, CONVERTIBLE CONTACTS (CONT.)

4, 5, 6 and 7 Pole Contact Arrangement

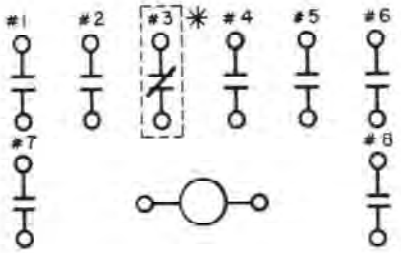

No. of Poles	Type	Contact Number 1	2	3	4	5	6	7	8
4	HDO-40	O	O	*	O		O		
	HDO-31	O	O	*	O		1		
	HDO-22	O	O	*	1		1		
	HDO-13	O	1	*	1		1		
	HDO-04	1	1	*	1		1		
5	HDO-50	O	O	*	O	O	O		
	HDO-41	O	O	*	O	O	1		
	HDO-32	O	O	*	O	1	1		
	HDO-23	O	O	*	1	1	1		
	HDO-14	O	1	*	1	1	1		
	HDO-05	1	1	*	1	1	1		
6	HDO-60	O	O	*	O	O	O		O
	HDO-51	O	O	*	O	O	O		1
	HDO-42	O	O	*	O	O	1		1
	HDO-33	O	O	*	O	1	1		1
	HDO-24	O	O	*	1	1	1		1
	HDO-15	O	1	*	1	1	1		1
	HDO-06	1	1	*	1	1	1		1
7	HDO-70	O	O	*	O	O	O	O	O
	HDO-61	O	O	*	O	O	O	O	1
	HDO-52	O	O	*	O	O	O	1	1
	HDO-43	O	O	*	O	O	1	1	1
	HDO-34	O	O	*	O	1	1	1	1
	HDO-25	O	O	*	1	1	1	1	1
	HDO-16	O	1	*	1	1	1	1	1
	HDO-07	1	1	*	1	1	1	1	1

*—Not available for use, economizing coil contact.
O—Normally Open Contact.
1—Normally Closed Contact.

2

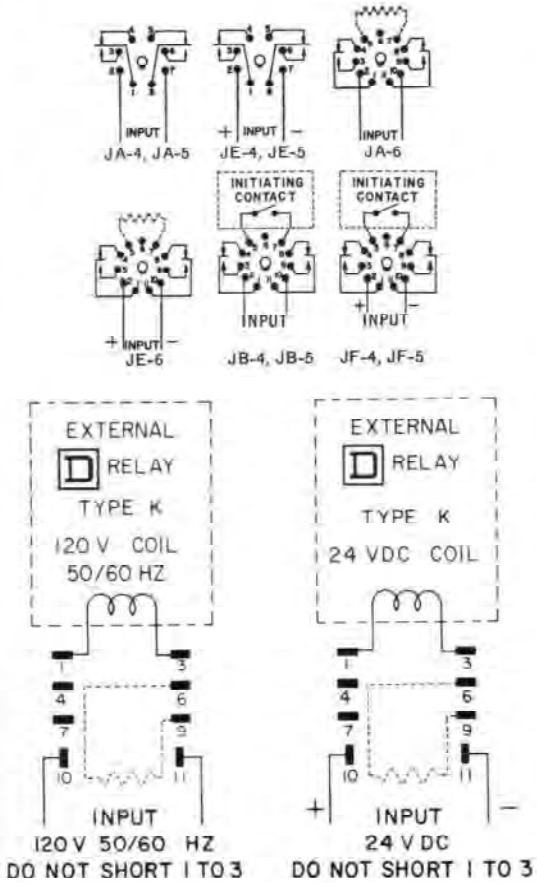

Types JC2, JG2 w/Knob
Types JC1, JG1 w/o Knob

3

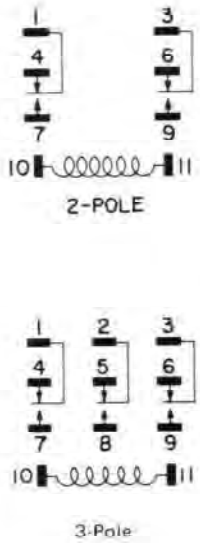

Types KS, KT, KSD and KTD

B65111-082

4

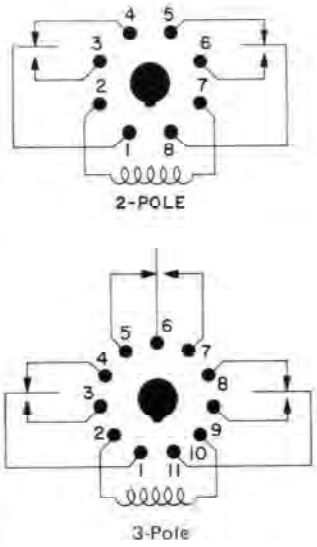

Types KP and KPD

B65111-084

CONTROL RELAYS

1

TYPE L, 10 AMPERE RELAY, CONVERTIBLE CONTACTS

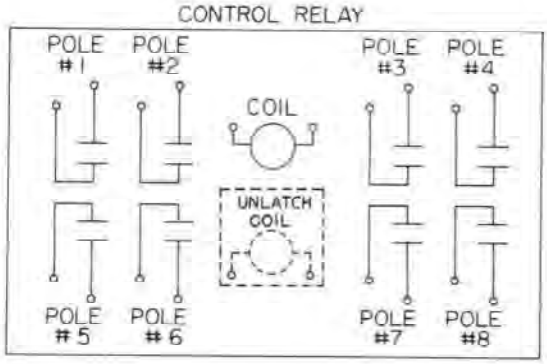

D30064-962

2, 3 and 4 Pole Relay All Contacts Convertible

No. of Poles	Type	Pole Number‡ 1	2	3	4
2	LO-20	O	S	S	O
	LO-11	O	S	S	1
	LO-02	1	S	S	1
3	LO-30	O	S	O	O
	LO-21	O	S	O	1
	LO-12	O	S	1	1
	LO-03	1	S	1	1
4	LO-40	O	O	O	O
	LO-31	O	O	O	1
	LO-22	O	O	1	1
	LO-13	O	1	1	1
	LO-04	1	1	1	1

‡O – Normally Open Contact
1 – Normally Closed Contact
S – Space for Future Contact

6 and 8 Pole Relay All Contacts Convertible

No. of Poles	Type	Pole Number‡ 1	2	3	4
		5	6	7	8
6	LO-60	O	O	O	O
		O	S	S	O
	LO-51	O	O	O	1
		O	S	S	O
	LO-42	O	O	1	1
		O	S	S	O
	LO-33	O	1	1	1
		O	S	S	O
	LO-24	1	1	1	1
		O	S	S	O
	LO-15	1	1	1	1
		O	S	S	1
	LO-06	1	1	1	1
		1	S	S	1
8	LO-80	O	O	O	O
		O	O	O	O
	LO-71	O	O	O	1
		O	O	O	O
	LO-62	O	O	1	1
		O	O	O	O
	LO-53	O	1	1	1
		O	O	O	O
	LO-44	1	1	1	1
		O	O	O	O
	LO-35	1	1	1	1
		O	O	O	1
	LO-26	1	1	1	1
		O	O	1	1
	LO-17	1	1	1	1
		O	1	1	1
	LO-08	1	1	1	1
		1	1	1	1

Note: Class 8501 Type LO- _ -LL latching relays have same contact arrangements as above except unlatch coil is added to diagram.

2

TYPE LT TIMER ATTACHMENT, ALL CONTACTS CONVERTIBLE

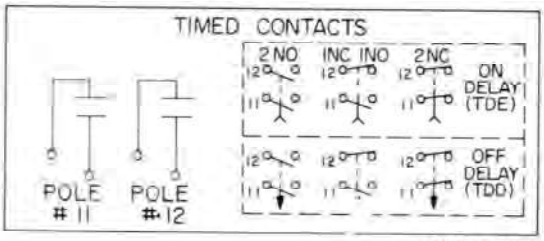

D30064-962

No. of Timed Contacts	Type	Pole Number‡ 11	12
2	LT	O	1

‡O – Normally Open Contact
1 – Normally Closed Contact
S – Space for Future Contact

1

TYPE P, 10 AMPERE RELAY

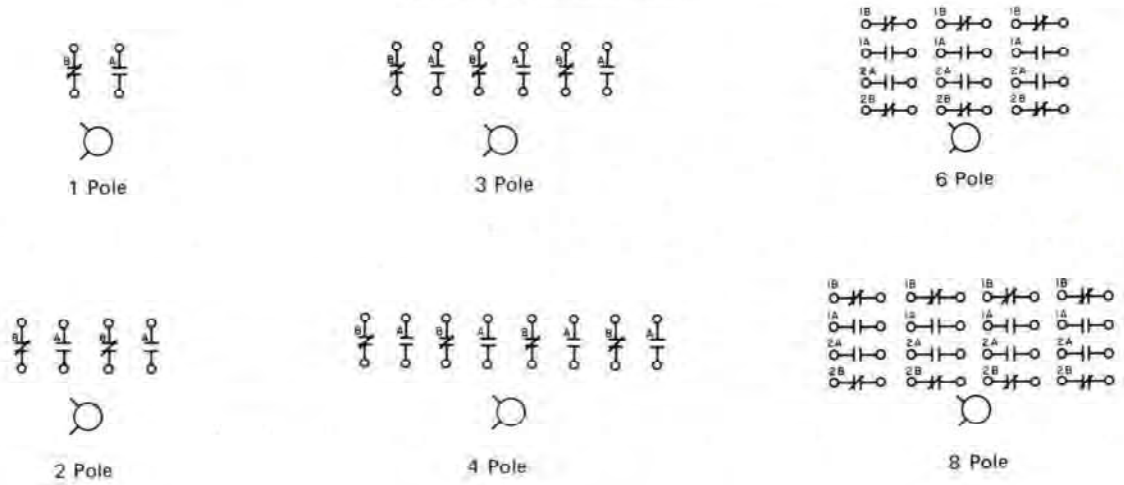

2

TYPE R, MINATURE RELAY

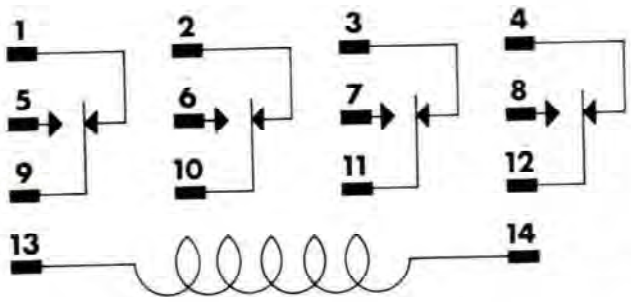

Types RS, RC, RSD and RCD

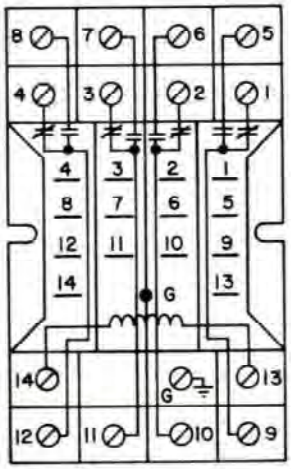

Types NR44 and NR44T Front Wired Socket

3

TYPE TO-20

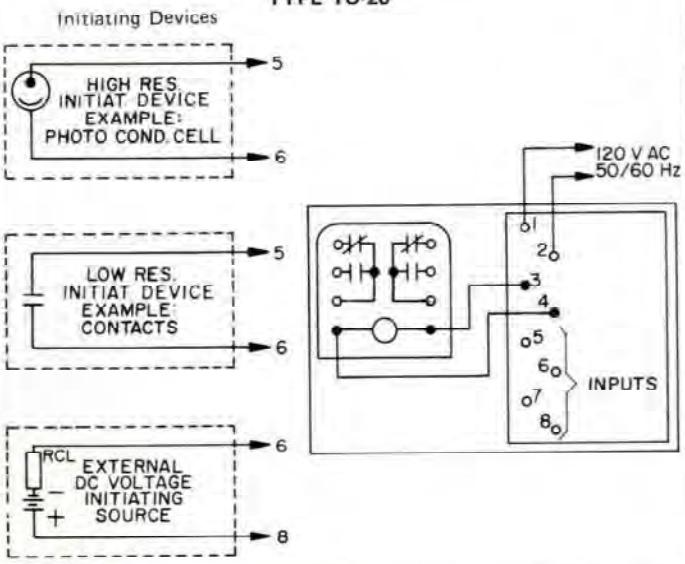

4

TYPE TO-21

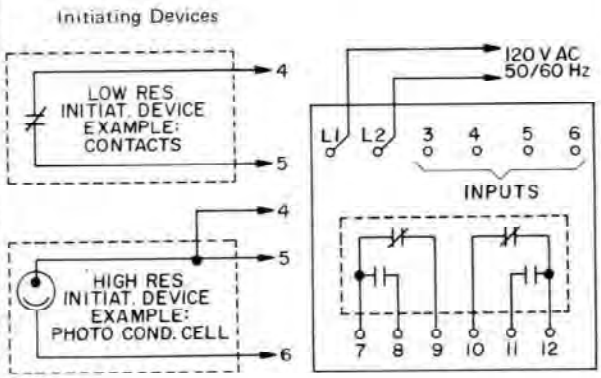

TYPE S AC MAGNETIC CONTACTORS

1

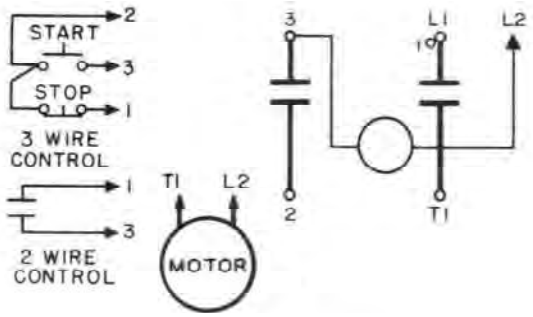

1 Pole, Sizes 0 and 1 Contactors

2

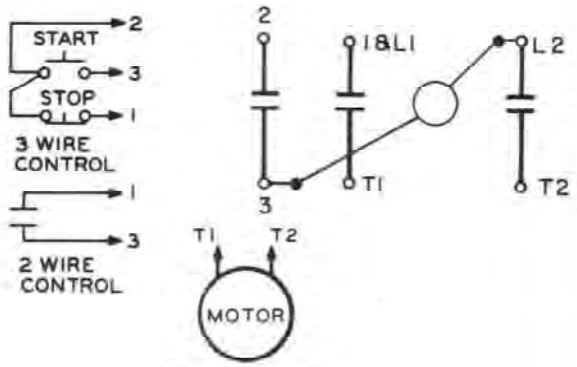

2 Pole, Size 00 Contactor

3

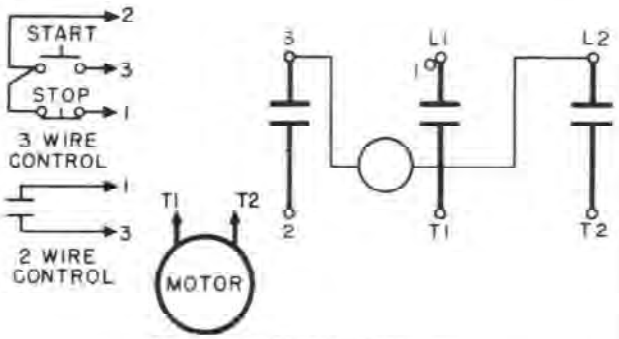

2 Pole, Sizes 0 and 1 Contactors

4

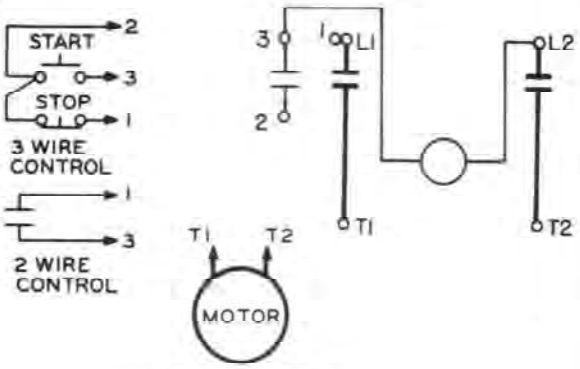

2 Pole, Sizes 2-5 Contactors

5

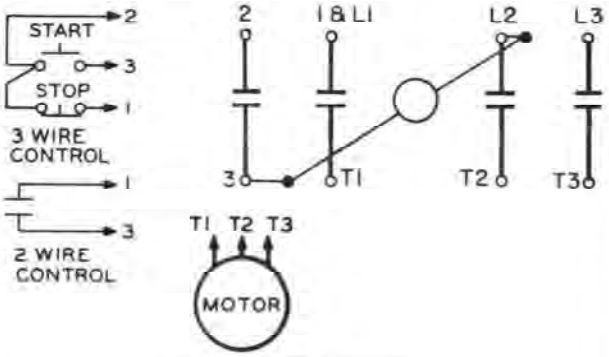

3 Pole, Size 00 Contactor

6

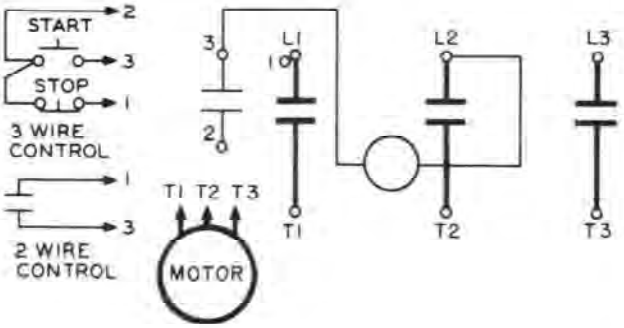

3 Pole, Sizes 0-5 Contactors

7

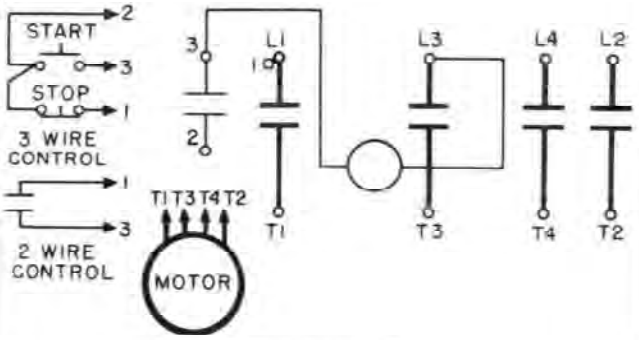

4 Pole, Sizes 0, 1 and 2 Contactors

8

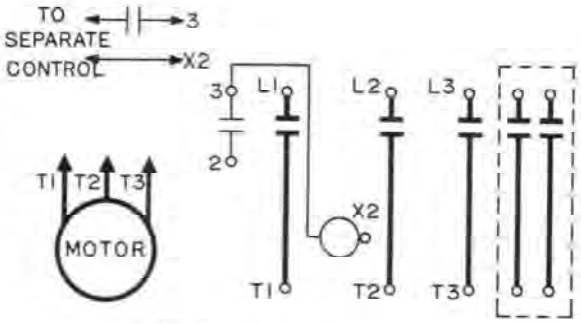

5 Pole, Sizes 0, 1 and 2 Contactors

1

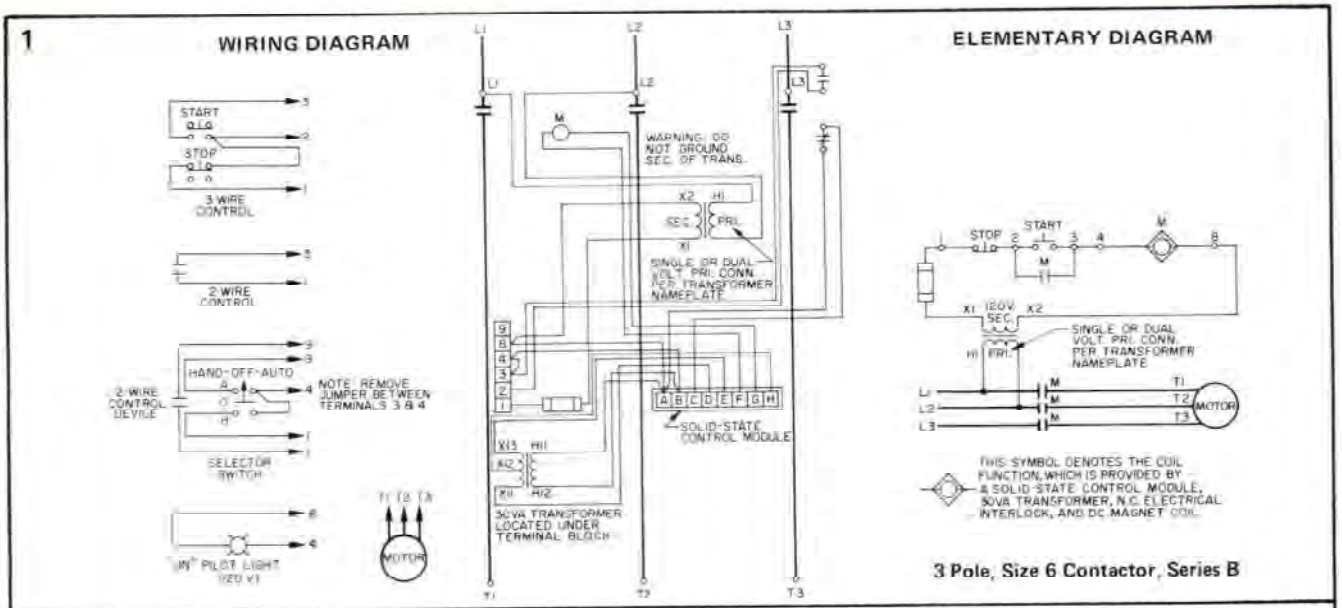

3 Pole, Size 6 Contactor, Series B

2

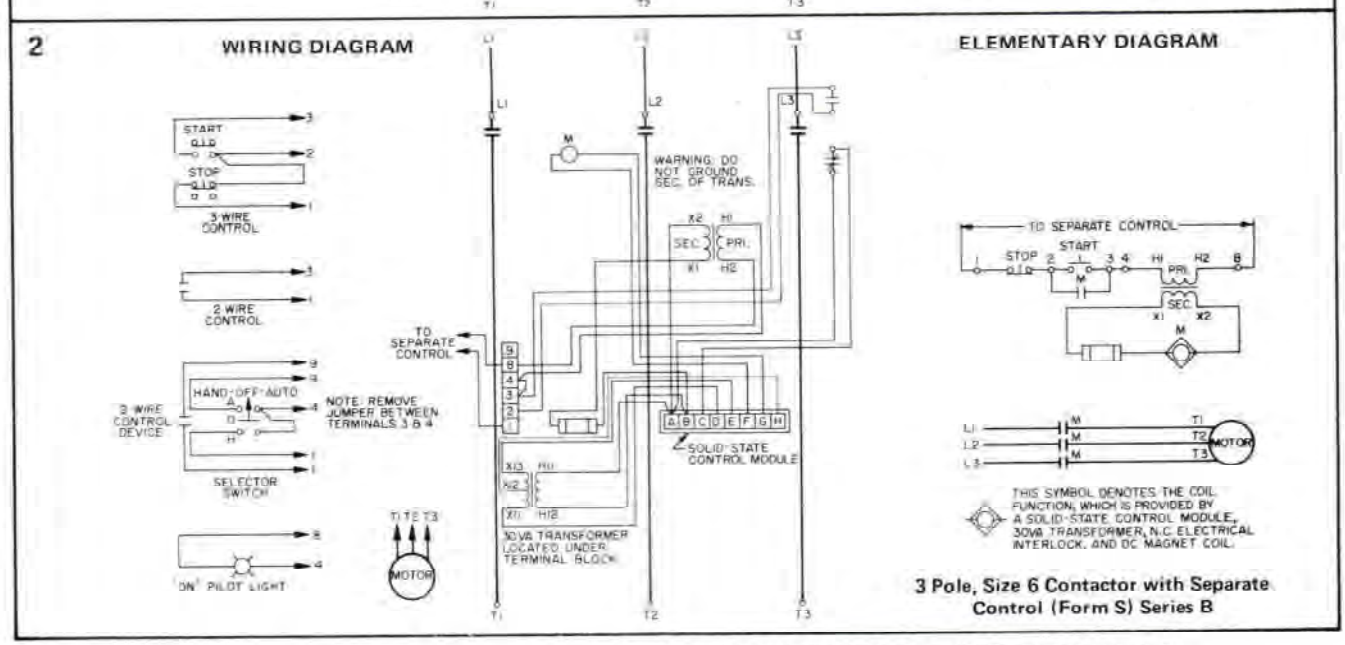

3 Pole, Size 6 Contactor with Separate Control (Form S) Series B

TYPES J and K AC MAGNETIC CONTACTORS

3

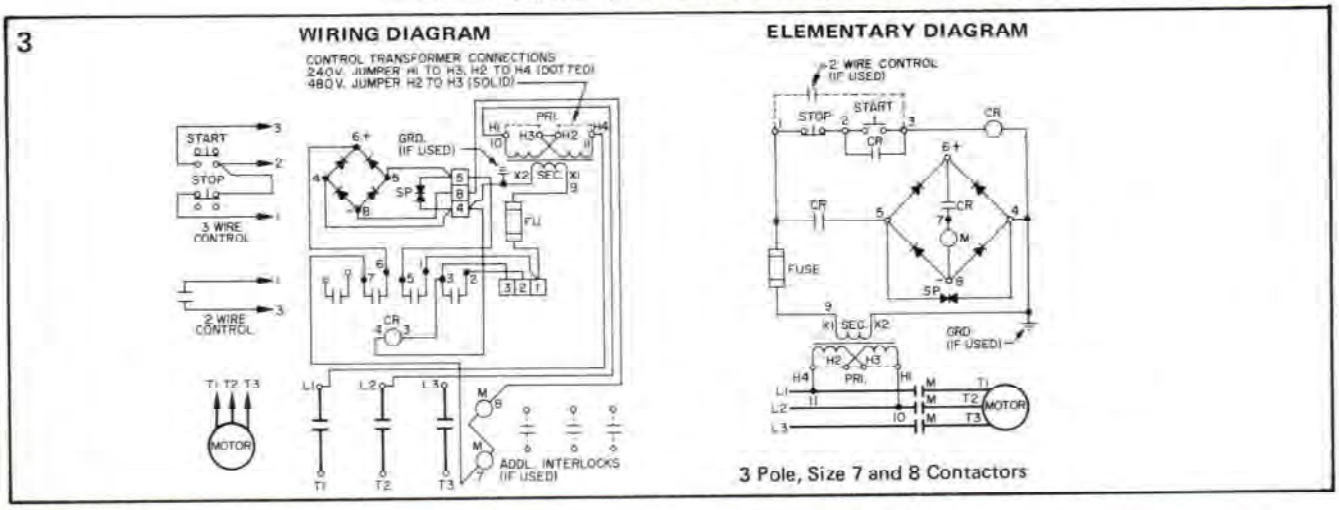

3 Pole, Size 7 and 8 Contactors

GROUND FAULT RELAYS FOR GROUNDED SYSTEMS

1

WIRING DIAGRAM

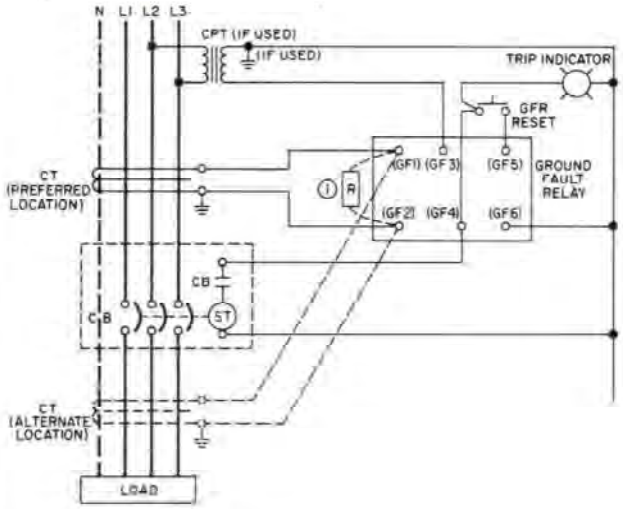

ELEMENTARY DIAGRAM

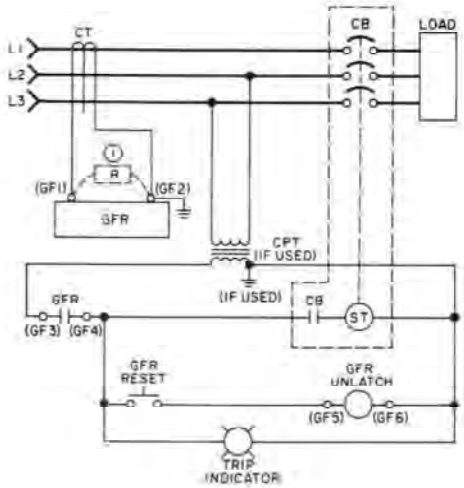

CIRCUIT BREAKERS

2

WIRING DIAGRAM

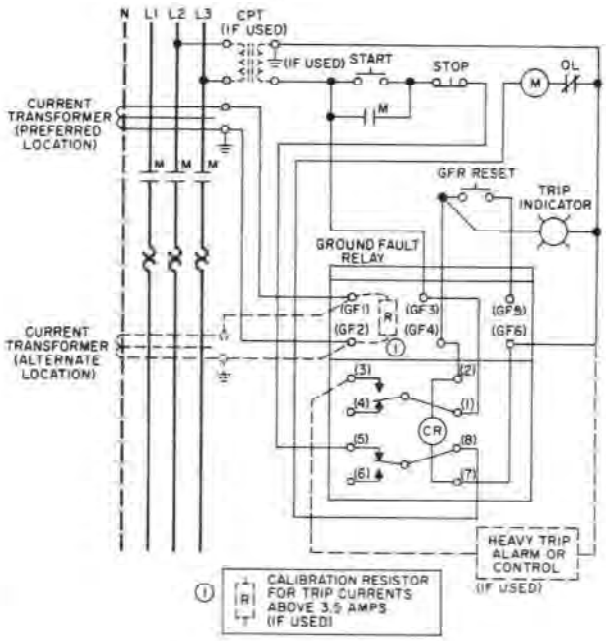

ELEMENTARY DIAGRAM

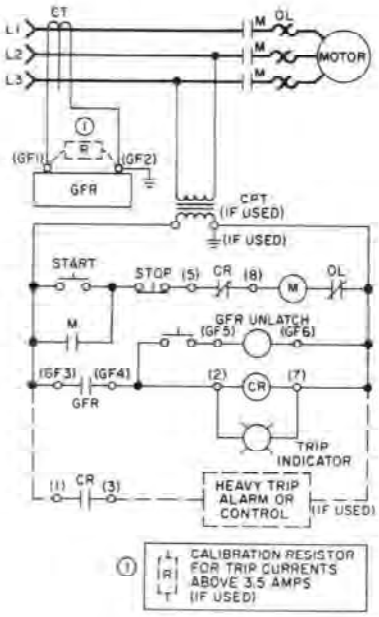

MOTOR STARTERS

SINGLE PHASE

1

WIRING DIAGRAM

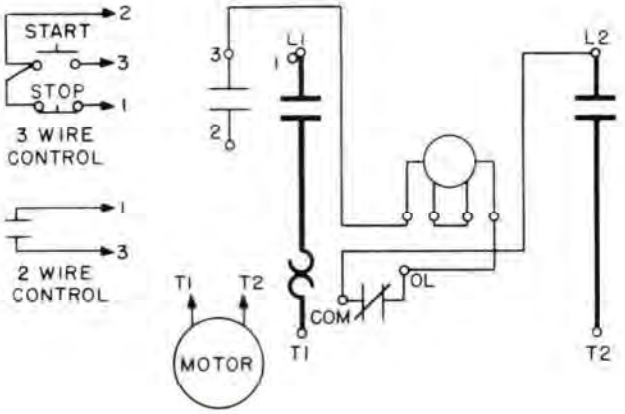

ELEMENTARY DIAGRAM

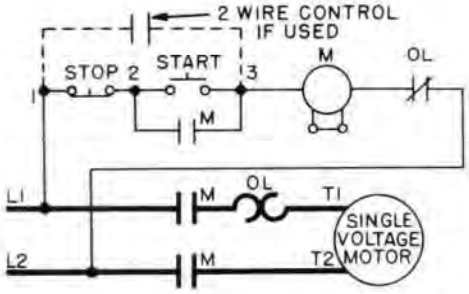

NOTE
STARTERS LEAVE FACTORY WITH COIL CONNECTED FOR THE HIGHER VOLTAGE. IF STARTER IS USED ON LOWER VOLTAGE CONNECT PER COIL DIAGRAM.

Sizes 0 and 1 Single Phase Starters Used with Single Voltage Motor

TYPE S AC LINE VOLTAGE MAGNETIC STARTERS

SINGLE PHASE (Continued)

1

WIRING DIAGRAM

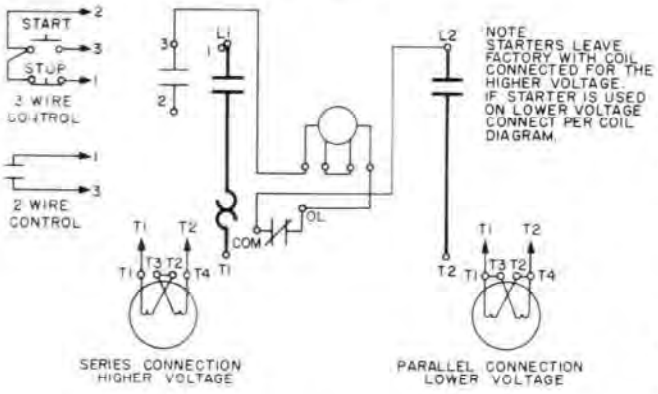

ELEMENTARY DIAGRAM

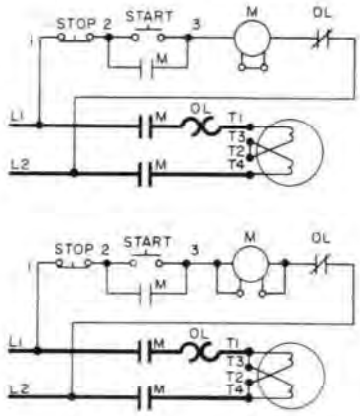

Sizes 0 and 1 Single Phase Starters Used with Dual Voltage Motor

2

WIRING DIAGRAM

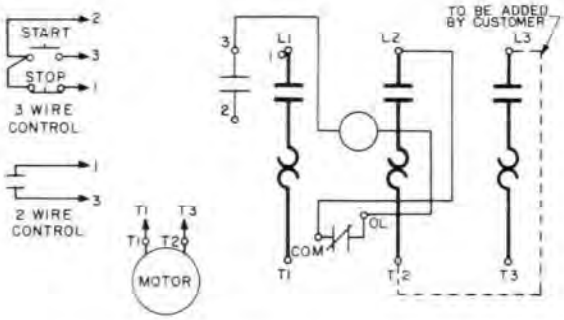

ELEMENTARY DIAGRAM

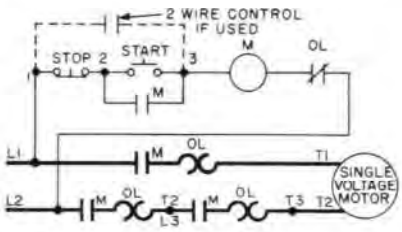

Sizes 0, 1 and 2, 3 Pole, 3 Phase Starters Connected for Single Phase, Single Voltage Motor

TWO PHASE

3

WIRING DIAGRAM

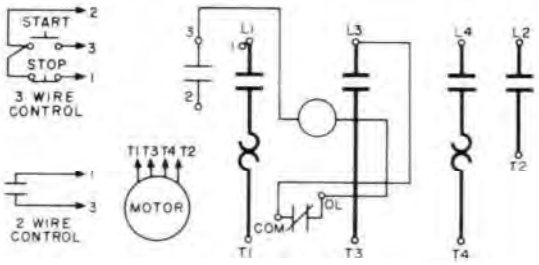

ELEMENTARY DIAGRAM

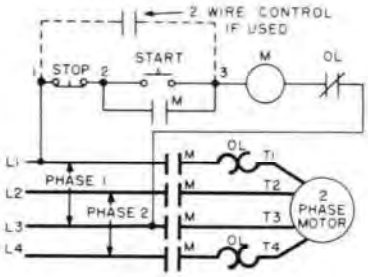

Sizes 0, 1 and 2, 4 Pole, 2 Phase, 4 Wire Starters with External 2 or 3 Wire Control

TYPE S AC LINE VOLTAGE MAGNETIC STARTERS

TWO PHASE (Continued)

1

WIRING DIAGRAM

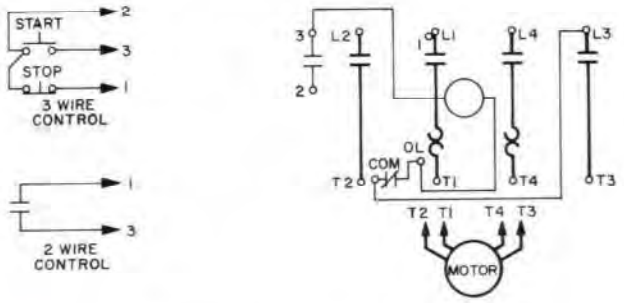

ELEMENTARY DIAGRAM

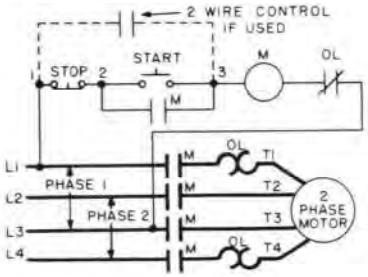

Sizes 3 and 4, 4 Pole, 2 Phase, 4 Wire Starters with External 2 or 3 Wire Control

THREE PHASE

2

WIRING DIAGRAM

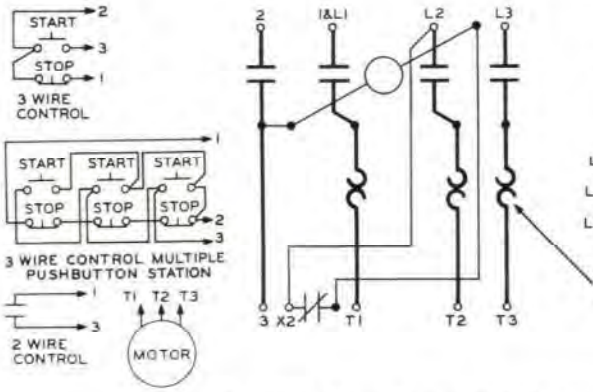

ELEMENTARY DIAGRAM

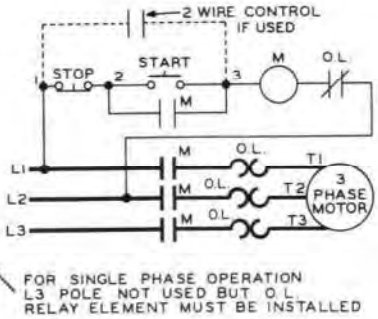

Size 00, 3 Pole, 3 Phase Starter with External 2 or 3 Wire Control

3

WIRING DIAGRAM

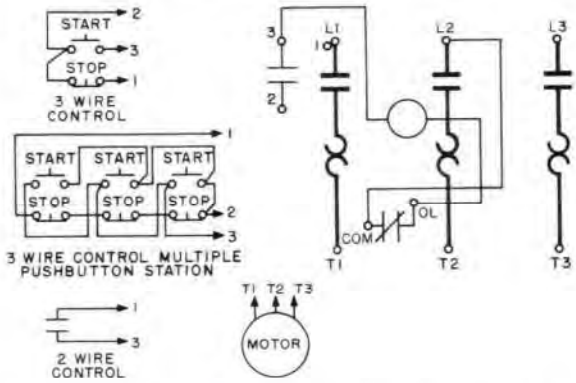

ELEMENTARY DIAGRAM

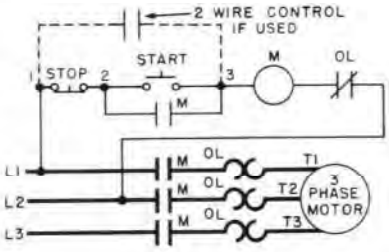

Sizes 0-4, 3 Pole, 3 Phase Starters with External 2 or 3 Wire Control

TYPE S AC LINE VOLTAGE MAGNETIC STARTERS

THREE PHASE (Continued)

1

WIRING DIAGRAM

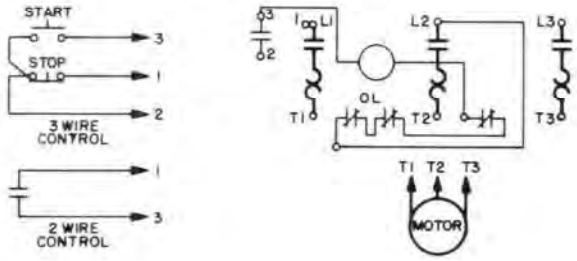

ELEMENTARY DIAGRAM

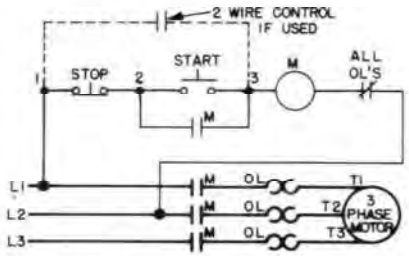

Size 5, 3 Pole, 3 Phase Starter with External 2 or 3 Wire Control

2

WIRING DIAGRAM

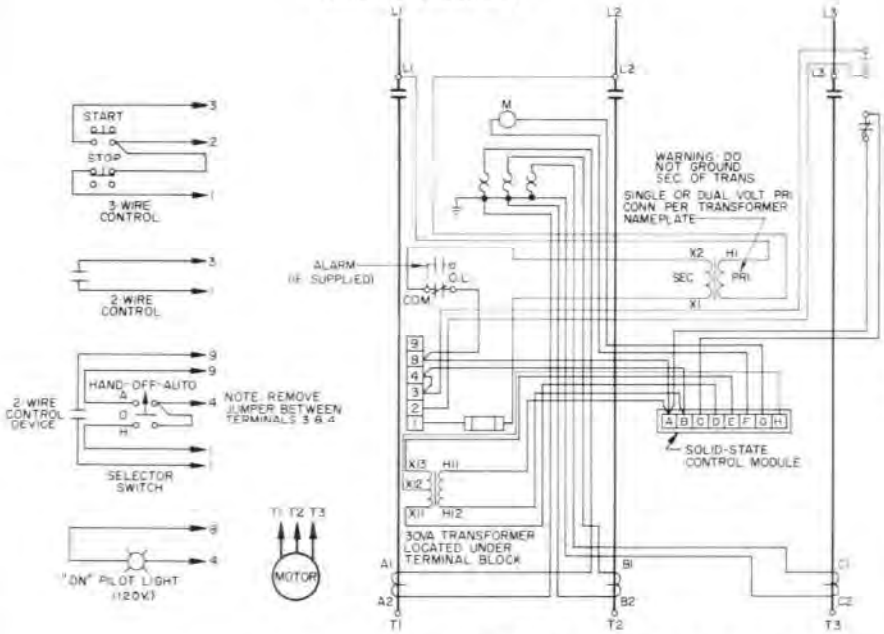

ELEMENTARY DIAGRAM

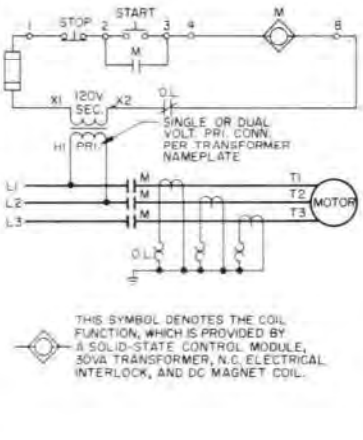

Size 6, 3 Pole, 3 Phase Starter, Series B

ADDITIONS AND SPECIAL FEATURES

3

WIRING DIAGRAM

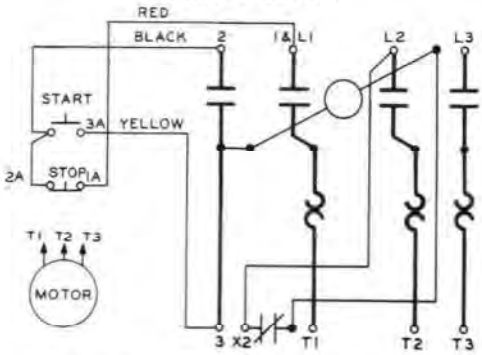

ELEMENTARY DIAGRAM

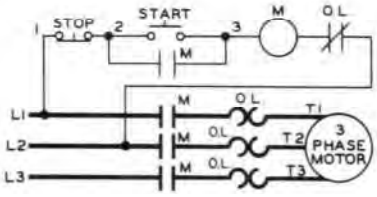

Size 00, 3 Pole, 3 Phase Starter with Start-Stop Push Button Mounted in Cover (Form A)

ADDITIONS AND SPECIAL FEATURES (Continued)

1

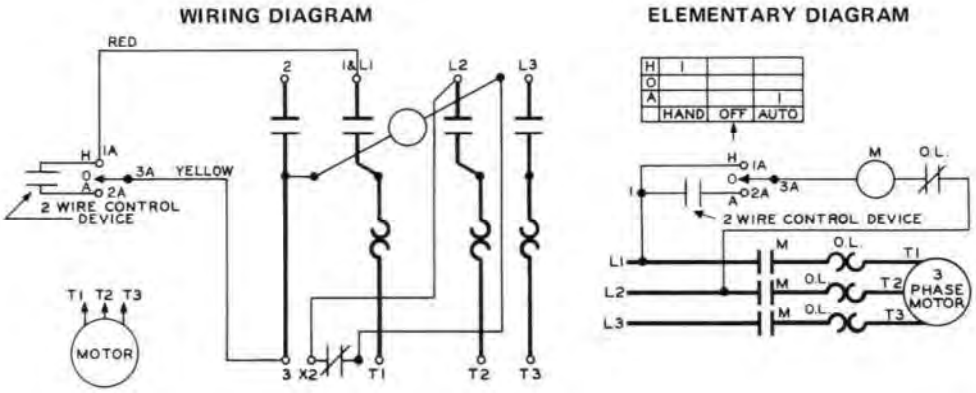

Size 00, 3 Pole, 3 Phase Starter with HAND-OFF-AUTO Selector Switch Mounted in Cover (Form C)

2

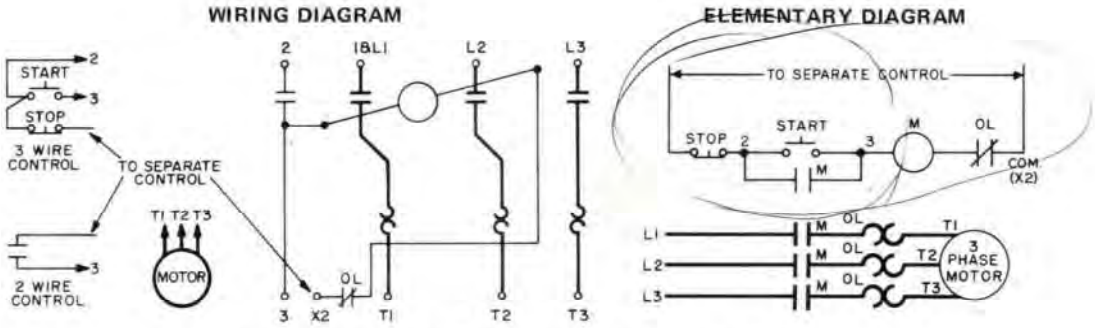

Size 00, 3 Pole, 3 Phase Starter with Separate Control (Form S)

3

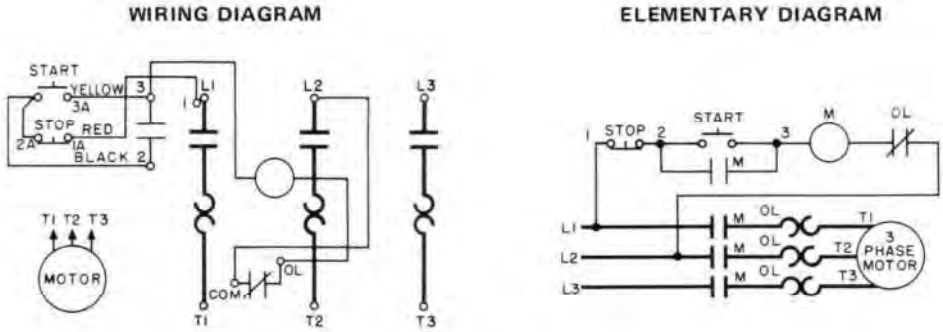

Sizes 0-4, 3 Pole, 3 Phase Starters with Start-Stop Pushbutton Mounted in Cover (Form A)

TYPE S AC LINE VOLTAGE MAGNETIC STARTERS

ADDITIONS AND SPECIAL FEATURES

1

WIRING DIAGRAM

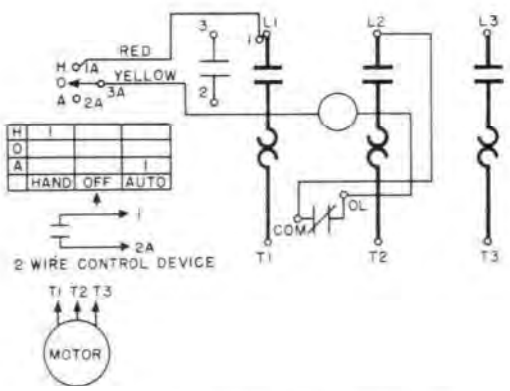

ELEMENTARY DIAGRAM

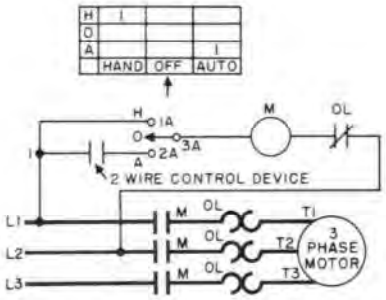

Sizes 0-4, 3 Pole, 3 Phase Starters with HAND-OFF-AUTO Selector Switch Mounted in Cover (Form C)

2

WIRING DIAGRAM

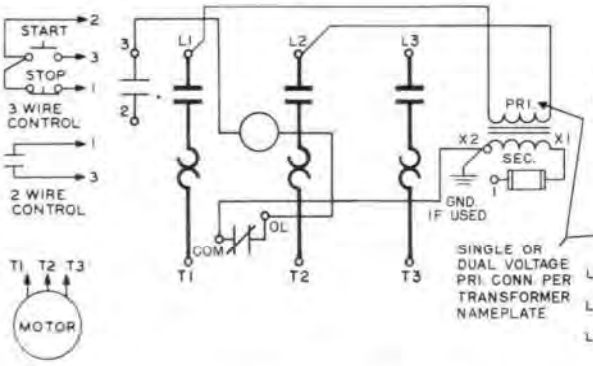

ELEMENTARY DIAGRAM

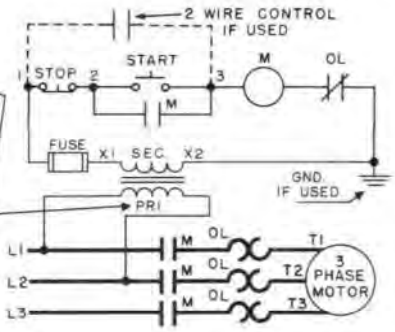

Sizes 0-4, 3 Pole, 3 Phase Starters with Control Circuit Transformer and Secondary Fuse (Form FT)

3

WIRING DIAGRAM

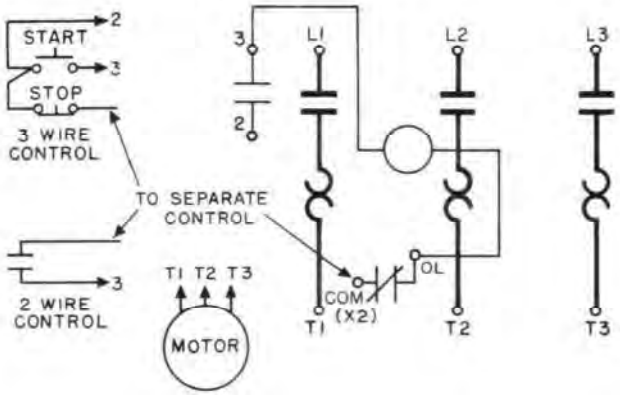

ELEMENTARY DIAGRAM

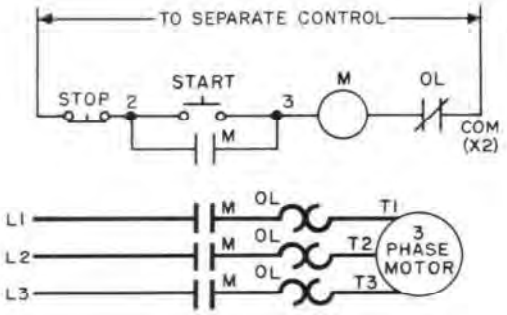

Sizes 0-4, 3 Pole, 3 Phase Starters with Separate Control (Form S)

ADDITIONS AND SPECIAL FEATURES (Continued)

1

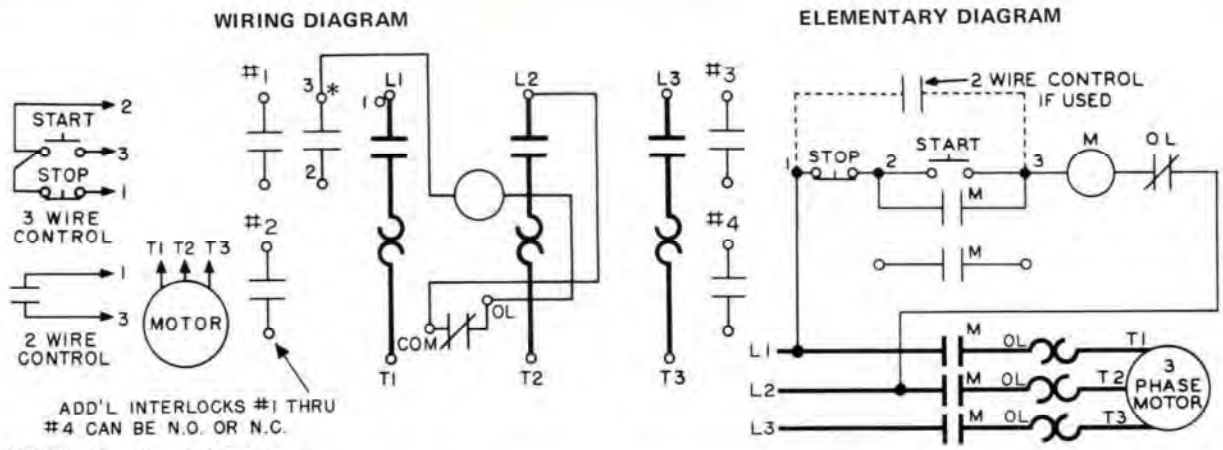

*On NEMA Size 3 and 4 Starters Holding Circuit Interlock is in Position No. 1.

Sizes 0-4, 3 Pole, 3 Phase Starters with Additional Interlocks (Form X)

2

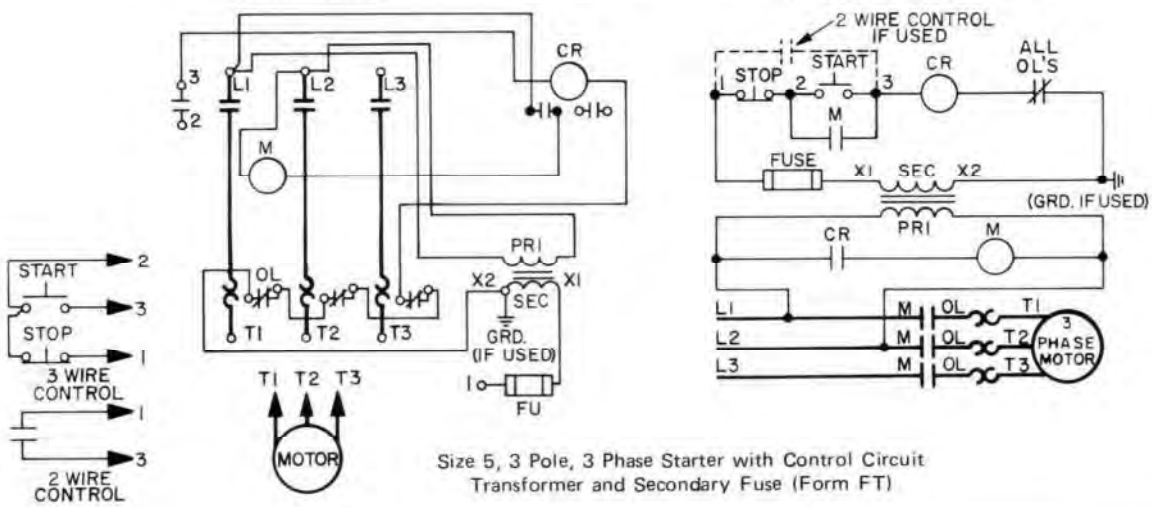

Size 5, 3 Pole, 3 Phase Starter with Control Circuit Transformer and Secondary Fuse (Form FT)

3

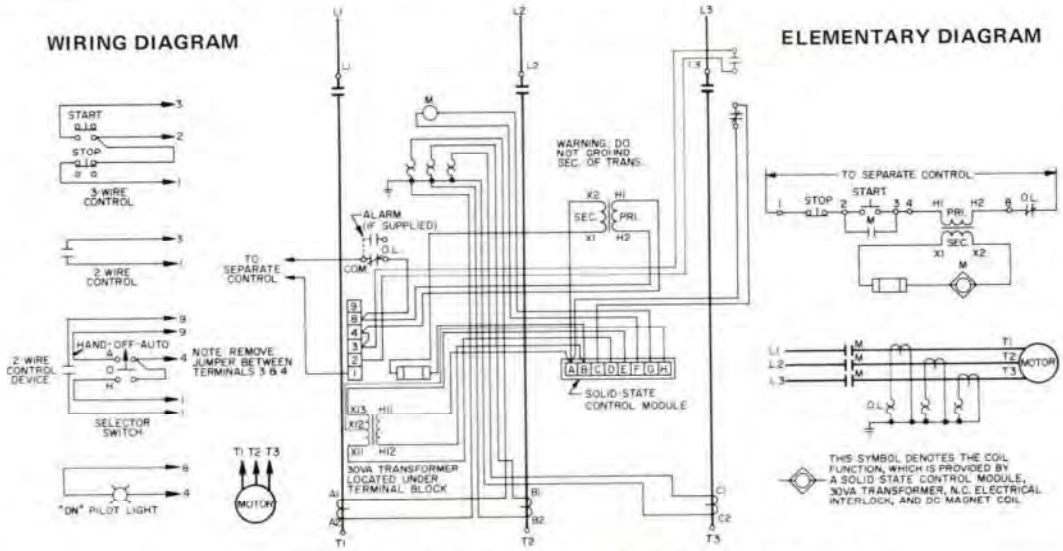

Size 6, 3 Pole, 3 Phase Starter with Separate Control (Form S, Series B)

TYPE S AC COMBINATION MAGNETIC STARTERS

1

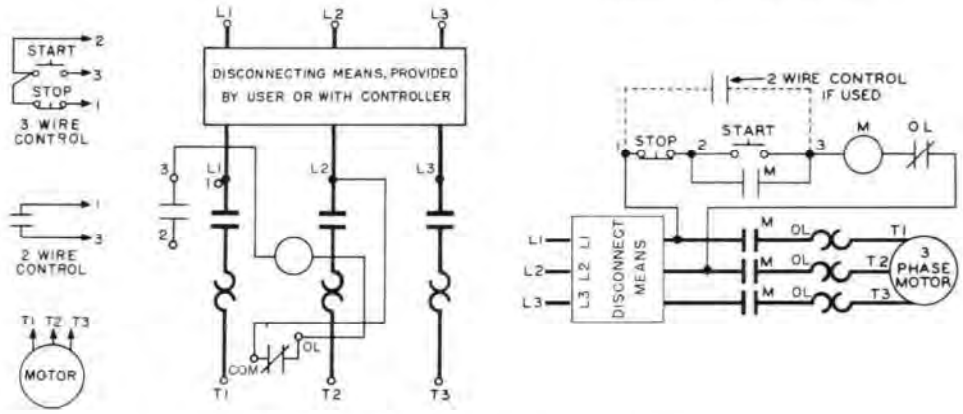

Sizes 0-4, 3 Pole, 3 Phase Combination Starters

2

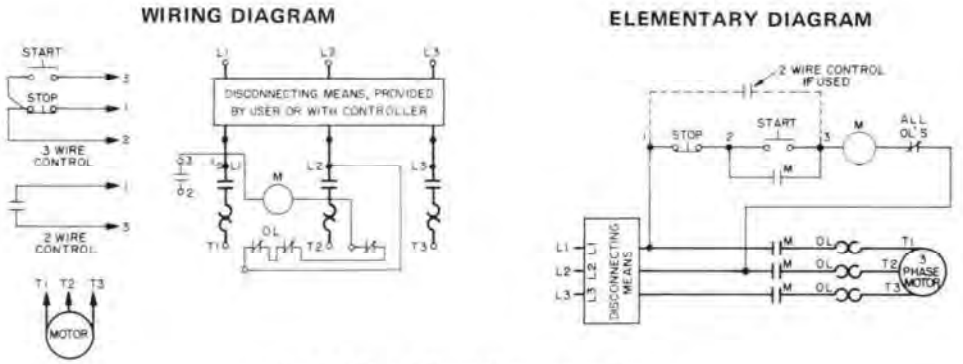

Size 5, 3 Pole, 3 Phase Combination Starter

3

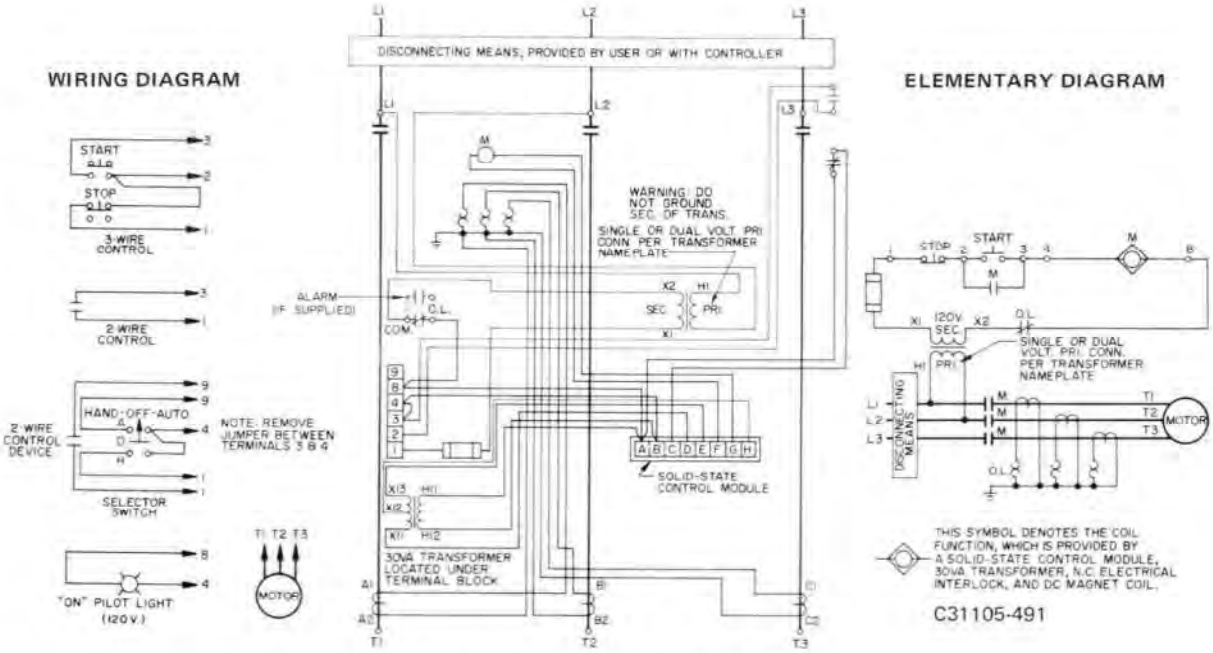

Size 6, 3 Pole, 3 Phase Starter, Series B

TYPE S AC COMBINATION MAGNETIC STARTERS

ADDITIONS AND SPECIAL FEATURES

1

WIRING DIAGRAM

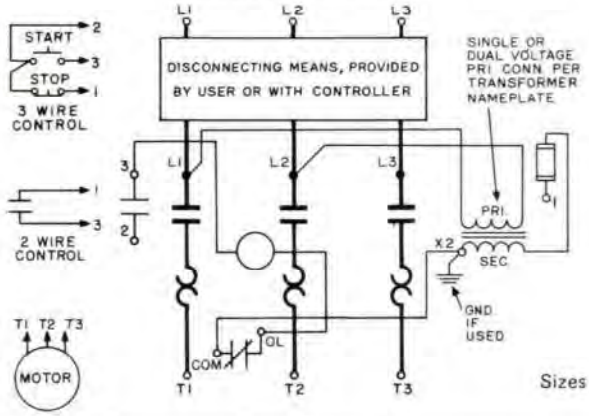

ELEMENTARY DIAGRAM

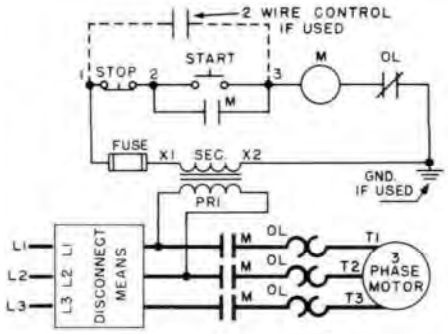

Sizes 0-4, 3 Pole, 3 Phase Combination Starters with Control Circuit Transformer and Secondary Fuse (Form FT)

2

WIRING DIAGRAM

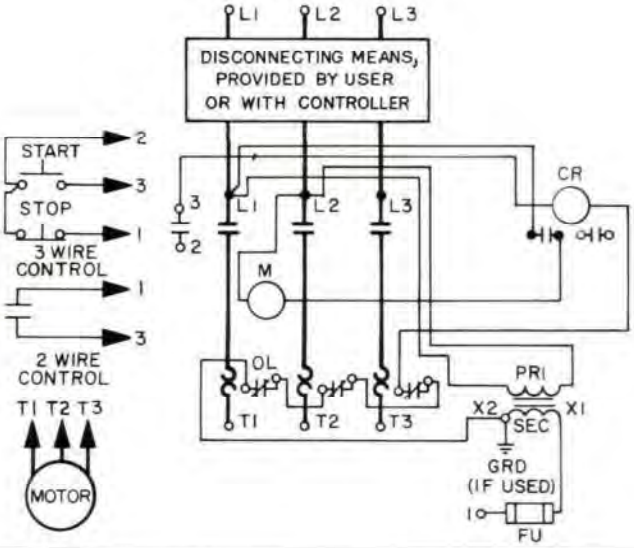

ELEMENTARY DIAGRAM

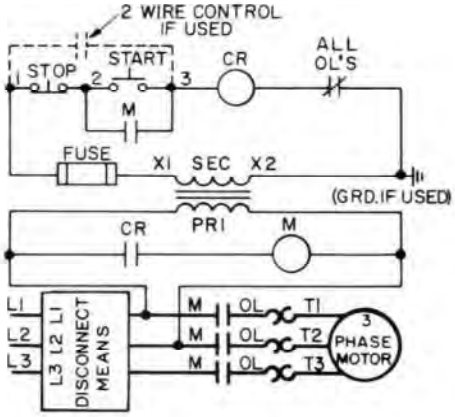

Size 5, 3 Phase Combination Starter with Control Circuit Transformer and Secondary Fuse (Form FT)

3

WIRING DIAGRAM

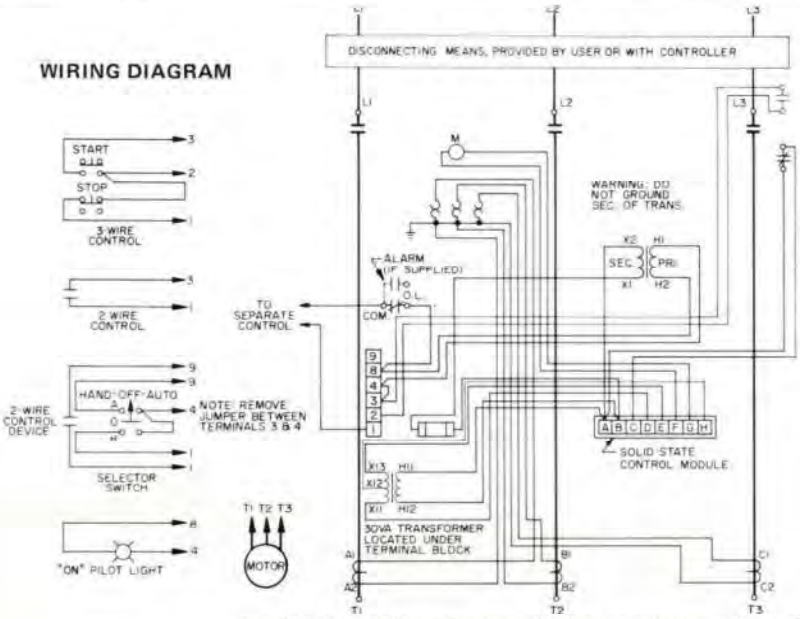

ELEMENTARY DIAGRAM

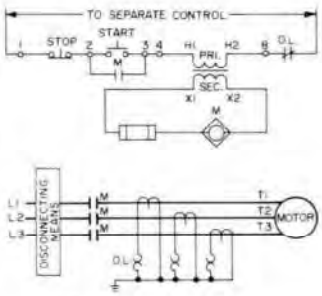

THIS SYMBOL DENOTES THE COIL FUNCTION, WHICH IS PROVIDED BY A SOLID-STATE CONTROL MODULE, 30VA TRANSFORMER, N.C. ELECTRICAL INTERLOCK, AND DC MAGNET COIL

Size 6, 3 Pole, 3 Phase Starter with Separate Control (Form S) Series B

TYPE S REDUCED VOLTAGE STARTERS PRIMARY RESISTOR TYPE

1

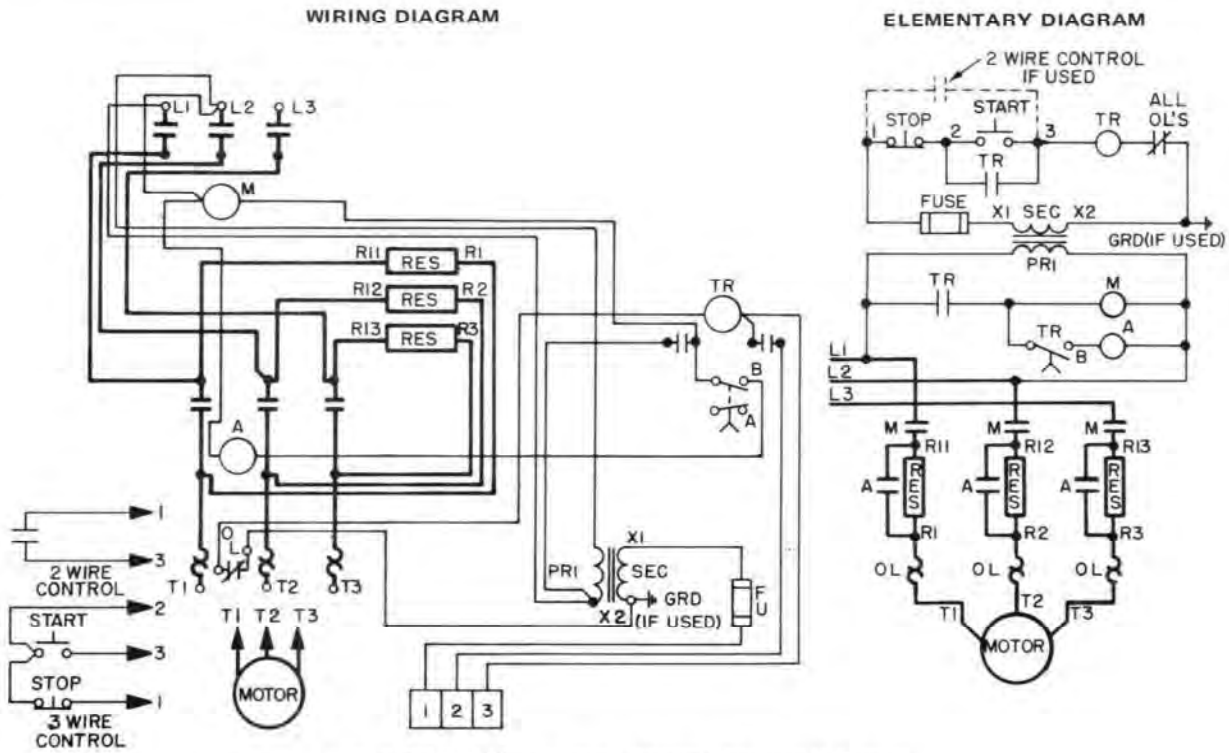

Sizes 1 and 2, 3 Phase Primary Resistor Starters with Control Circuit Transformer and Secondary Fuse (Form FT)

2

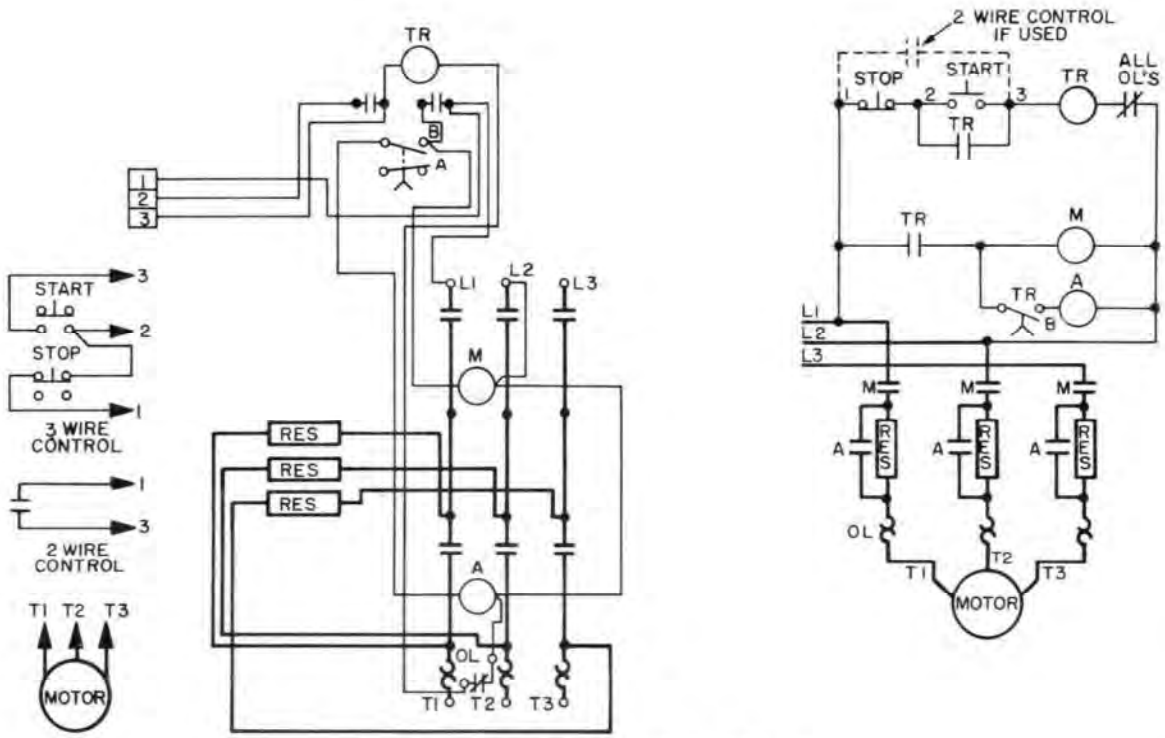

Sizes 3 and 4, 3 Phase Primary Resistor Starter

1

WIRING DIAGRAM

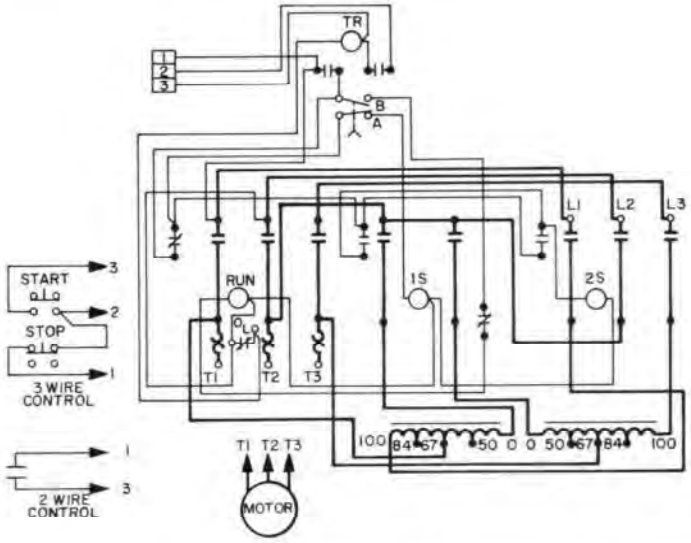

ELEMENTARY DIAGRAM

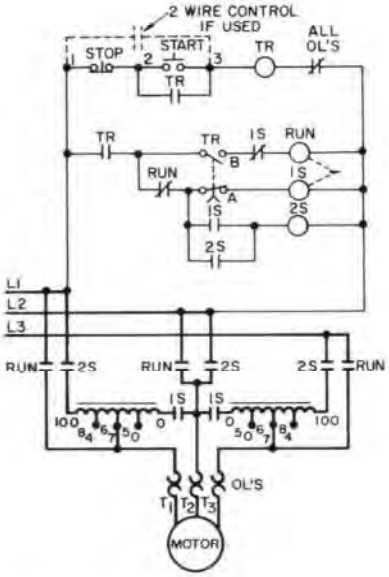

Size 2 Reduced Voltage Autotransformer Starters with Closed Transition Starting

2

WIRING DIAGRAM

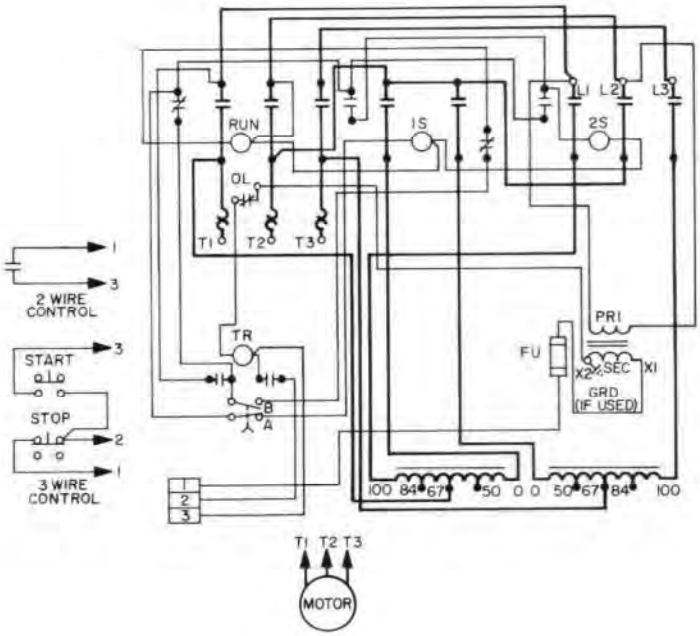

ELEMENTARY DIAGRAM

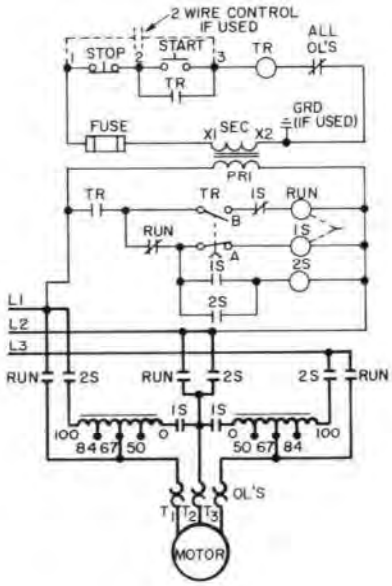

Sizes 3 and 4 Reduced Voltage Autotransformer Starters with Closed Transition Starting, Control Circuit Transformer and Secondary Fuse (Form FT)

TYPE S REDUCED VOLTAGE STARTERS WYE-DELTA TYPE

1

ELEMENTARY DIAGRAM

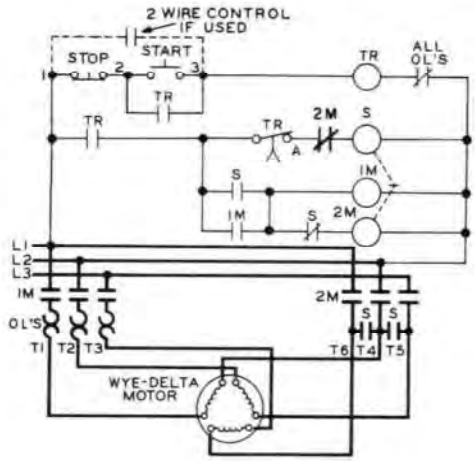

Elementary Diagram of Sizes 1YD-5YD Starters with Open Transition Starting

2

ELEMENTARY DIAGRAM

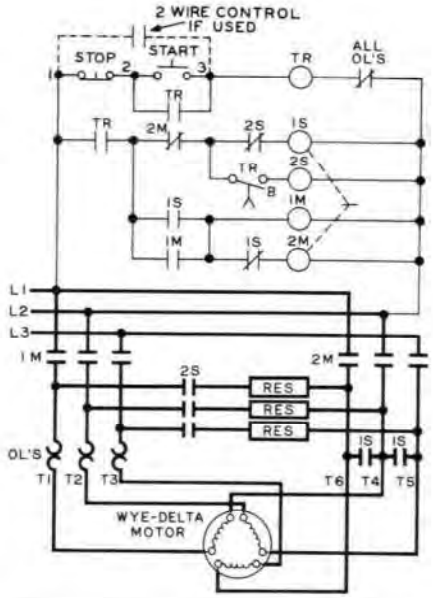

Elementary Diagram of Sizes 1YD-5YD Starters with Closed Transition Starting

3

WIRING DIAGRAM

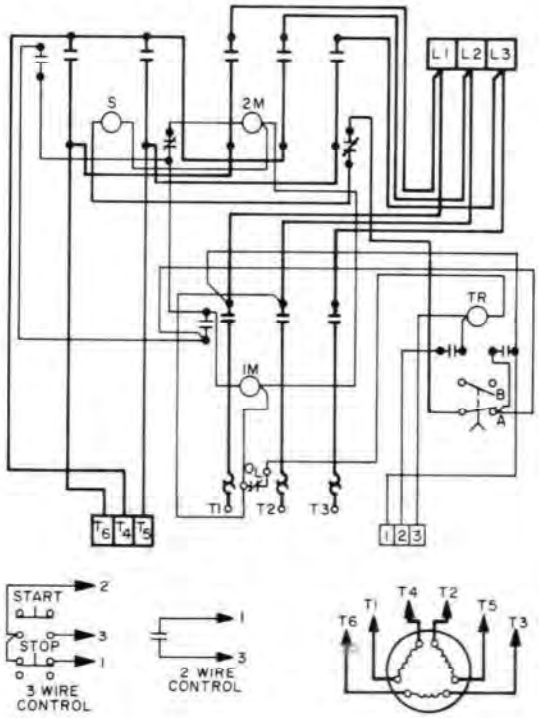

Sizes 1YD and 2YD Starters with Open Transition Starting

4

WIRING DIAGRAM

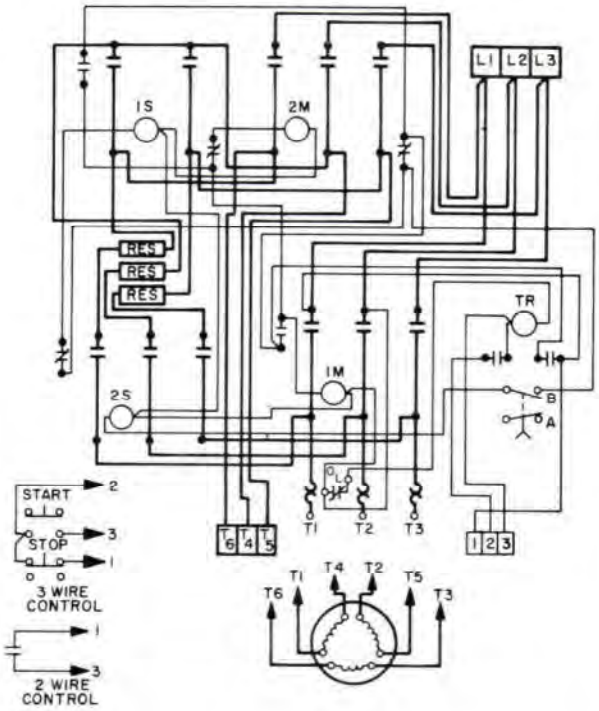

Sizes 1YD and 2YD Starters with Closed Transition Starting

TYPE S REDUCED VOLTAGE STARTERS - WYE-DELTA TYPE

CLASS 8630

1

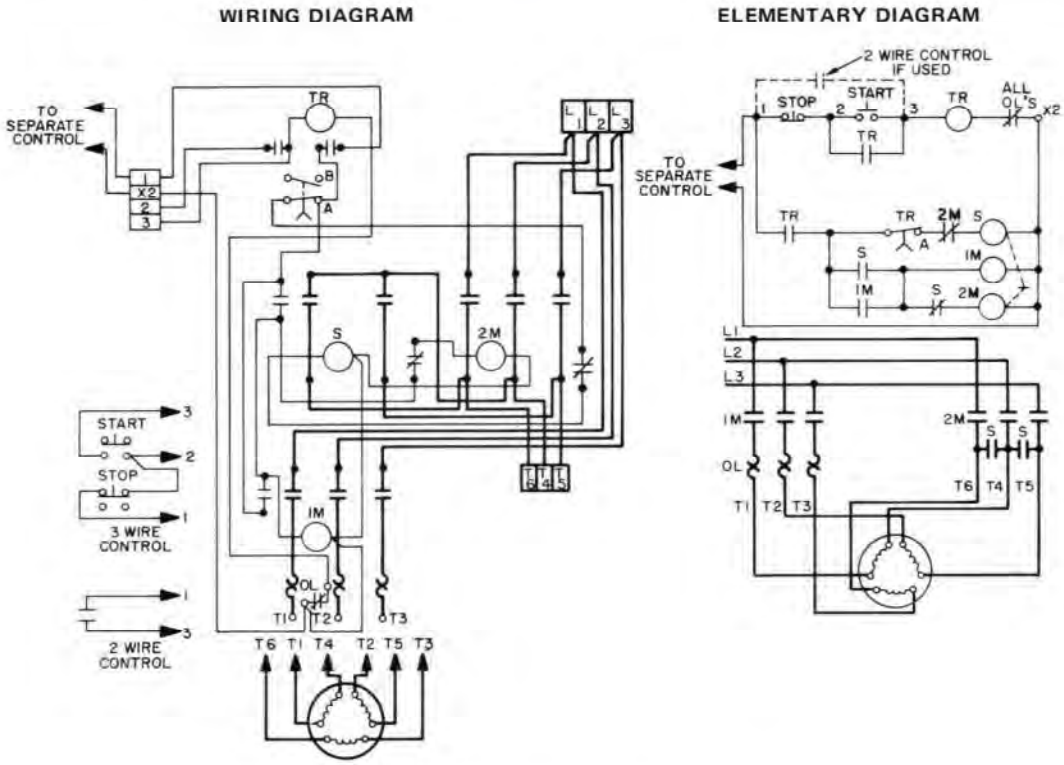

Sizes 3YD and 4YD, 3 Phase, Starters, with Open Transition Starting and Separate Control (Form S)

TYPE S REDUCED VOLTAGE STARTERS - PART WINDING TYPE

CLASS 8640

2

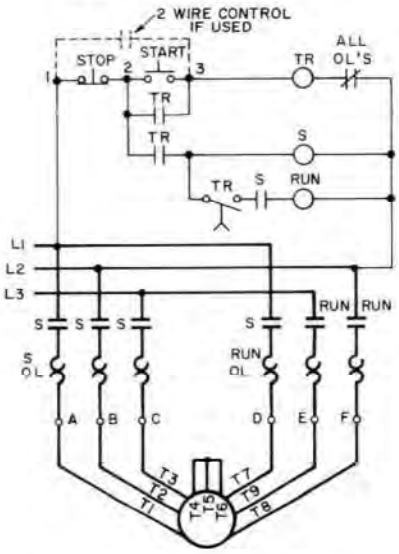

Elementary Diagram of Sizes 1PW-4PW, 2 Step Part Winding Starters

3

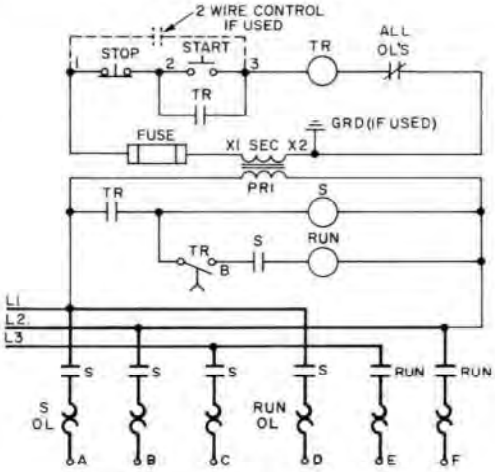

FOR MOTOR LEAD CONNECTIONS SEE TABLE IN 42-3

Elementary Diagram of Size 3PW, 2 Step Part Winding Starters with Control Circuit Transformer and Secondary Fuse (Form FT)

TYPE S REDUCED VOLTAGE STARTERS
PART WINDING TYPE

1

WIRING DIAGRAM

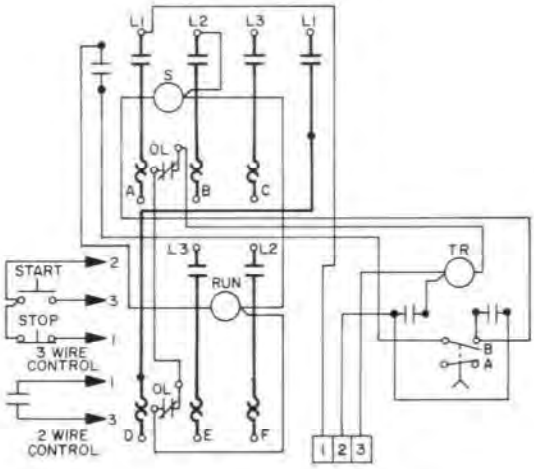

FOR MOTOR LEAD CONNECTIONS SEE TABLE IN 42-3

Sizes 1PW and 2PW, 2 Step Part Winding Starters

2

WIRING DIAGRAM

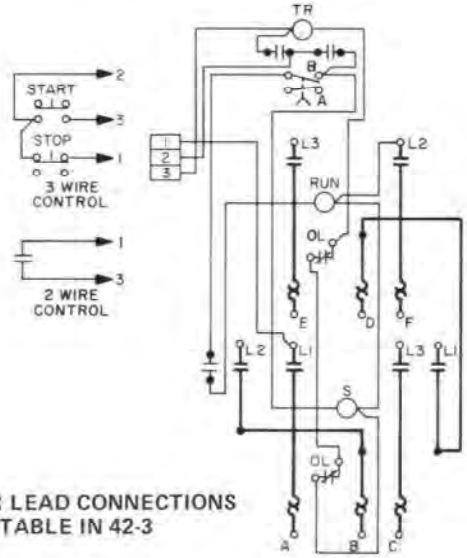

FOR MOTOR LEAD CONNECTIONS SEE TABLE IN 42-3

Sizes 3 PW and 4 PW, 2 Step Part Winding Starters

3

WIRING DIAGRAM

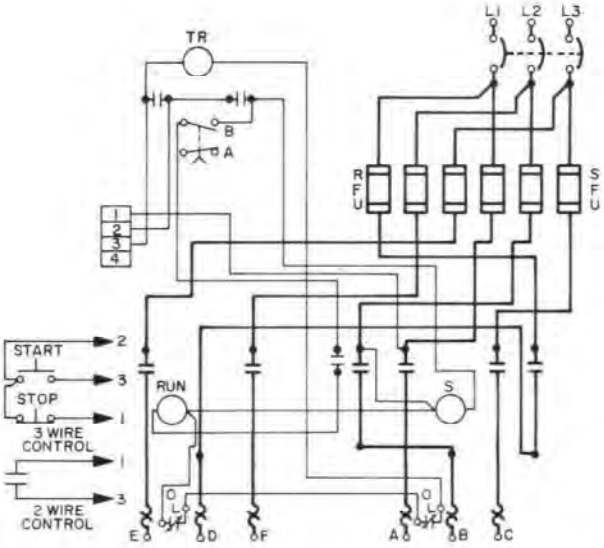

ELEMENTARY DIAGRAM

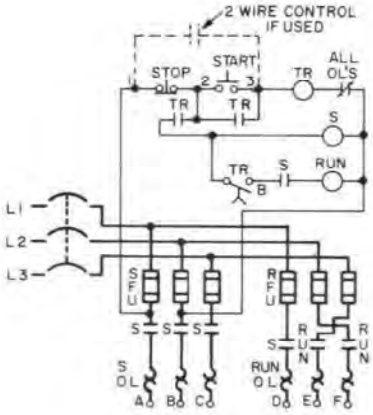

Size 3 PW Starter with Fusible Disconnect Switch Having Two Sets of Fuses (Form Y 79-61)

MOTOR LEAD CONNECTIONS

NO. OF MOTOR LEADS	PART WINDING SCHEME	LOAD TERM ON STR.					
		A	B	C	D	E	F
6	1/2 WYE or 1/2 DELTA	T1	T2	T3	T7	T9	T8
6	2/3 WYE or 2/3 DELTA	T1	T2	T9	T7	T3	T8
9 (1)	1/2 WYE	T1	T2	T3	T7	T9	T8
9 (1)	2/3 WYE	T1	T2	T9	T7	T3	T8
9 (2)	1/2 DELTA	T1	T8	T3	T7	T9	T2

(1) AT TERM. BOX CONNECT T4, T5, AND T6 TOGETHER

(2) AT TERM. BOX – CONNECT T4 AND T8 TOGETHER; CONNECT T5 AND T9 TOGETHER; CONNECT T6 AND T7 TOGETHER

TYPE S REDUCED VOLTAGE STARTERS - WOUND ROTOR TYPE

CLASS 8650 8651

1

ELEMENTARY DIAGRAM

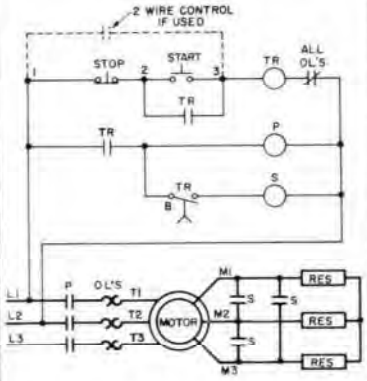

Elementary Diagram of Non-Reversing Wound Rotor Motor Starter with 2 Points of Acceleration

2

ELEMENTARY DIAGRAM

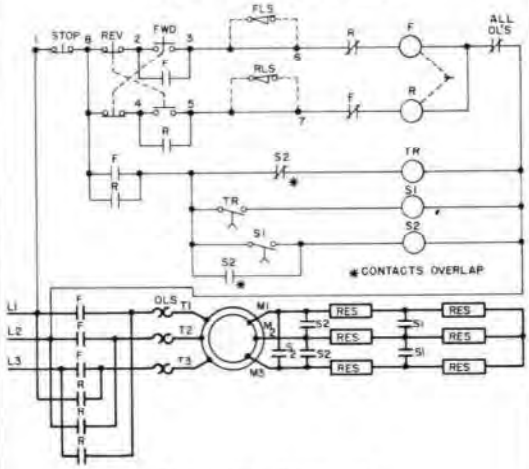

Elementary Diagram of Reversing Wound Rotor Motor Starter with 3 Points of Acceleration

3

WIRING DIAGRAM

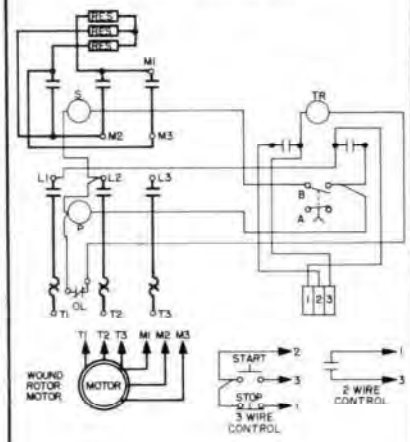

Size 1 Wound Rotor Motor Starter with 2 Point of Acceleration

TYPE S AC REVERSING MAGNETIC STARTERS

CLASS 8736

4

WIRING DIAGRAM

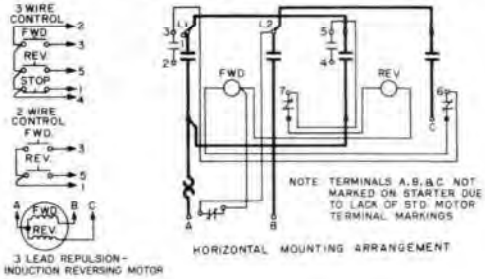

ELEMENTARY DIAGRAM

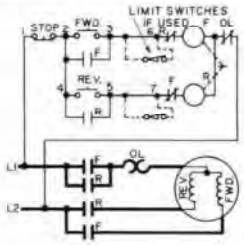

Sizes 00, 0 and 1, 2 Pole Reversing Starters Used with Single Phase, 3 Lead Motors

5

WIRING DIAGRAM

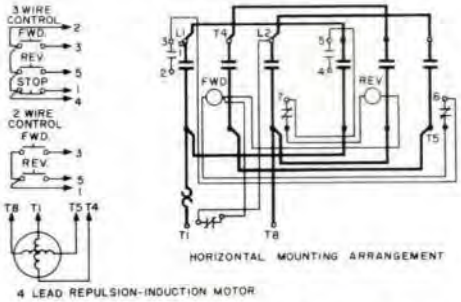

ELEMENTARY DIAGRAM

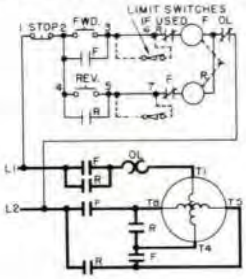

Sizes 00, 0 and 1, 3 Pole Reversing Starters Used with Single Phase, 4 Lead Repulsion Induction Motors

TYPE S AC REVERSING MAGNETIC STARTERS

1

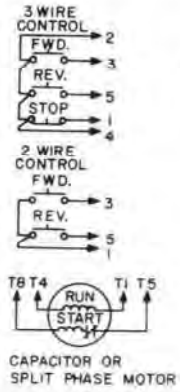

WIRING DIAGRAM

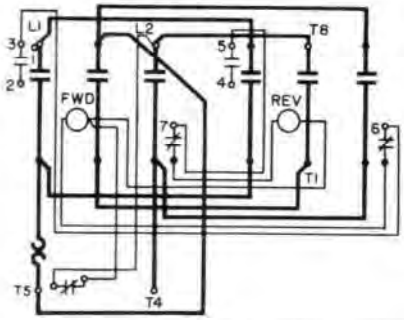

HORIZONTAL MOUNTING ARRANGEMENT

ELEMENTARY DIAGRAM

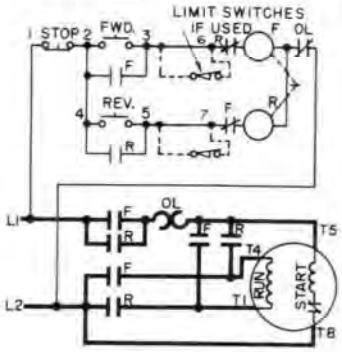

Sizes 00, 0 and 1, 3 Pole Reversing Starters Used With Single Phase, 4 Lead Capacitor or Split Phase Motors

2

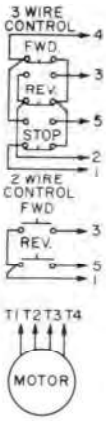

WIRING DIAGRAM

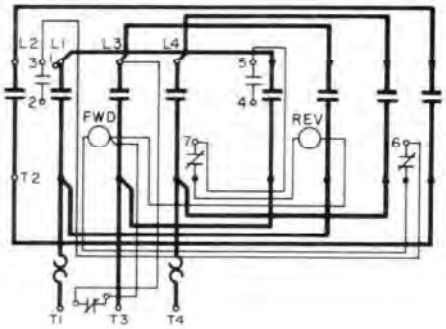

HORIZONTAL MOUNTING ARRANGEMENT

ELEMENTARY DIAGRAM

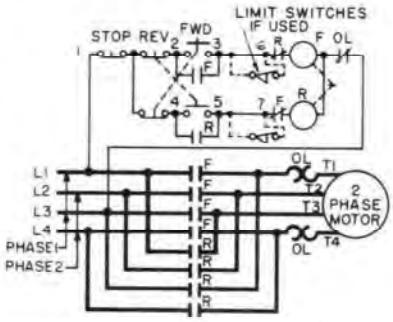

Sizes 00, 0, 1 and 2, 4 Pole, 2 Phase 4 Wire Reversing Starters

3

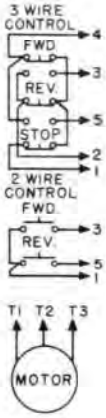

WIRING DIAGRAM

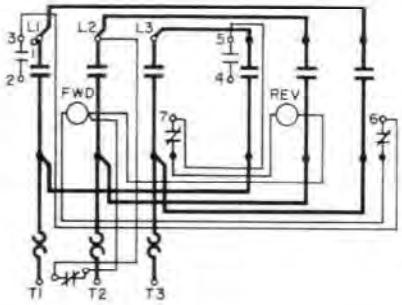

HORIZONTAL MOUNTING ARRANGEMENT

ELEMENTARY DIAGRAM

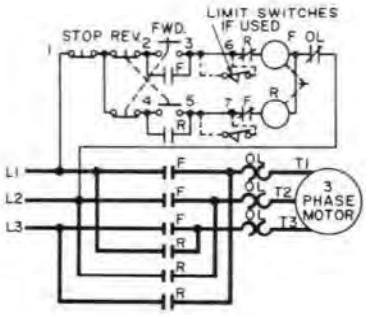

Sizes 00 - 4, 3 Pole, 3 Phase Reversing Starters

TYPE S AC REVERSING MAGNETIC STARTERS

CLASS 8736

1

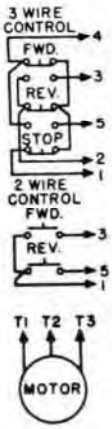

WIRING DIAGRAM

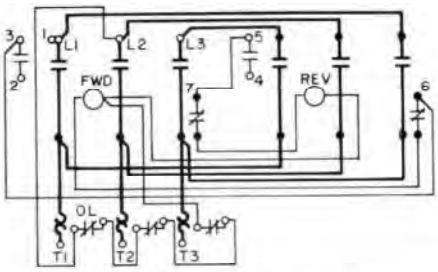

SPEED	L1	L2	L3	OPEN
LOW	T1	T2	T3	T11,T12,T13
HIGH	T11	T12	T13	T1,T2,T3

ELEMENTARY DIAGRAM

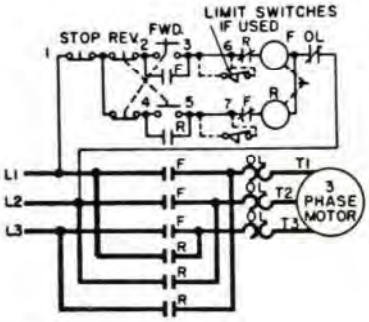

Size 5, 3 Pole, 3 Phase Reversing Starter

TYPE S AC TWO SPEED MAGNETIC STARTERS

CLASS 8810

2

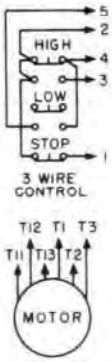

WIRING DIAGRAM

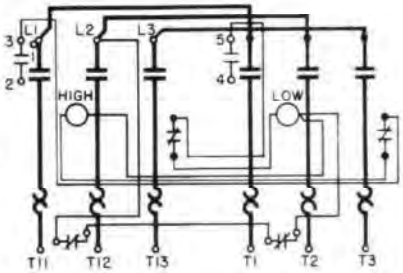

SPEED	L1	L2	L3	OPEN
LOW	T1	T2	T3	T11,T12,T13
HIGH	T11	T12	T13	T1,T2,T3

ELEMENTARY DIAGRAM

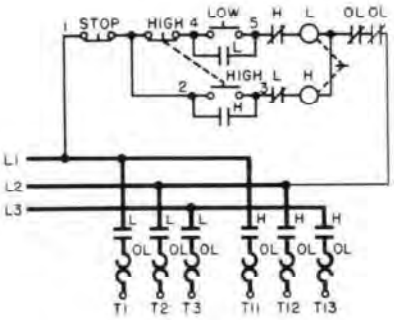

Sizes 0-4 Starters for Two Speed, Two Winding (Separate Winding), 3 Phase Motors

3

WIRING DIAGRAM

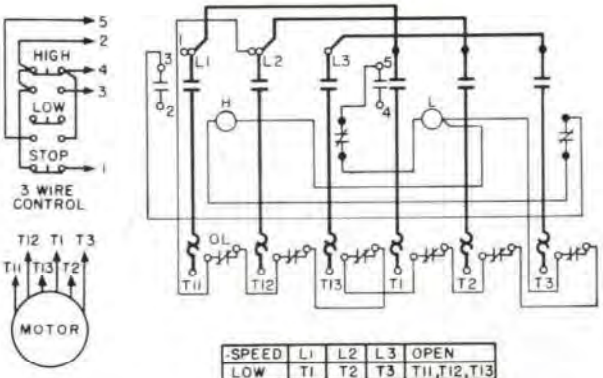

SPEED	L1	L2	L3	OPEN
LOW	T1	T2	T3	T11,T12,T13
HIGH	T11	T12	T13	T1,T2,T3

Size 5 Starter for Two Speed, Two Winding (Separate Winding), 3 Phase Motors

TYPE S AC TWO SPEED MAGNETIC STARTERS

1

WIRING DIAGRAM

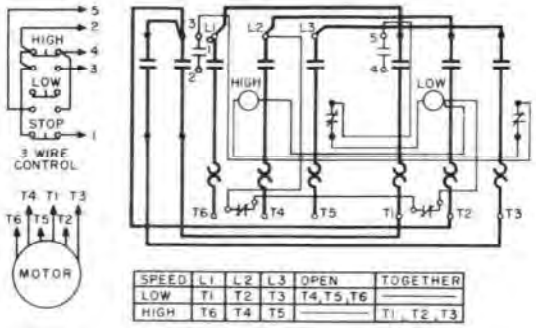

SPEED	L1	L2	L3	OPEN	TOGETHER
LOW	T1	T2	T3	T4,T5,T6	——
HIGH	T6	T4	T5	——	T1, T2, T3

ELEMENTARY DIAGRAM

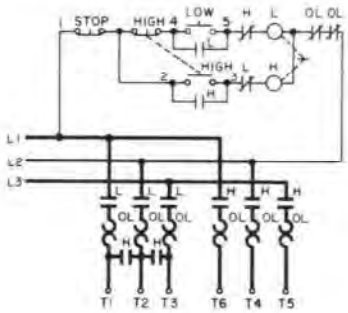

Sizes 0, 1 and 2 Starters for Two Speed, One Winding (Consequent Pole), Constant or Variable Torque, 3 Phase Motor

2

WIRING DIAGRAM

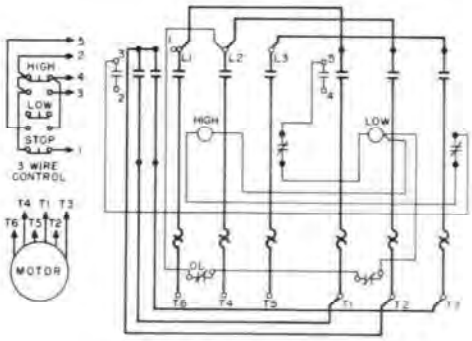

SPEED	L1	L2	L3	OPEN	TOGETHER
LOW	T1	T2	T3	T4,T5,T6	——
HIGH	T6	T4	T5	——	T1, T2, T3

Sizes 3 and 4 Starters for Two Speed, One Winding (Consequent Pole), Constant or Variable Torque, 3 Phase Motor

3

WIRING DIAGRAM

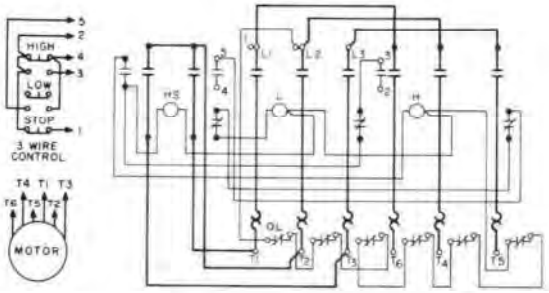

SPEED	L1	L2	L3	OPEN	TOGETHER
LOW	T1	T2	T3	T4,T5,T6	——
HIGH	T6	T4	T5	——	T1, T2, T3

Size 5 Starter for Two Speed, One Winding (Consequent Pole), Constant or Variable Torque, 3 Phase Motor

4

WIRING DIAGRAM

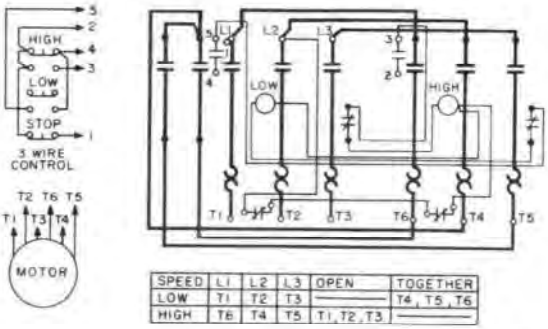

SPEED	L1	L2	L3	OPEN	TOGETHER
LOW	T1	T2	T3	——	T4, T5, T6
HIGH	T6	T4	T5	T1, T2, T3	——

ELEMENTARY DIAGRAM

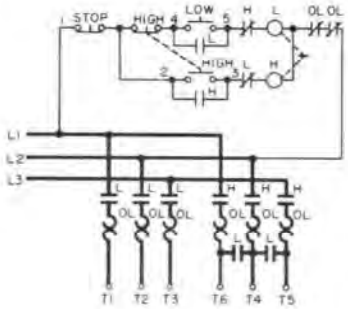

Sizes 0, 1 and 2 Starters for Two Speed, One Winding (Consequent Pole), Constant Horsepower, 3 Phase Motor

1

WIRING DIAGRAM

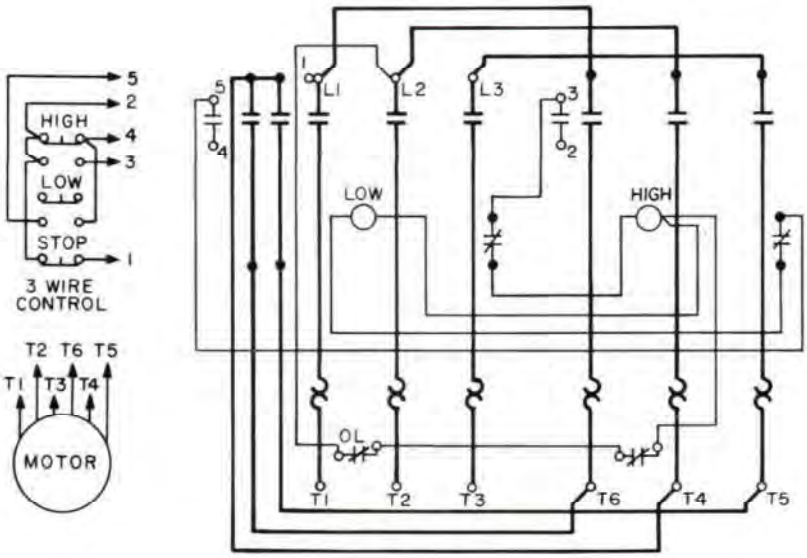

SPEED	L1	L2	L3	OPEN	TOGETHER
LOW	T1	T2	T3	———	T4,T5,T6
HIGH	T6	T4	T5	T1 T2 T3	———

Sizes 3 and 4 Starters for Two Speed, One Winding (Consequent Pole), Constant Horsepower, 3 Phase Motor

2

WIRING DIAGRAM

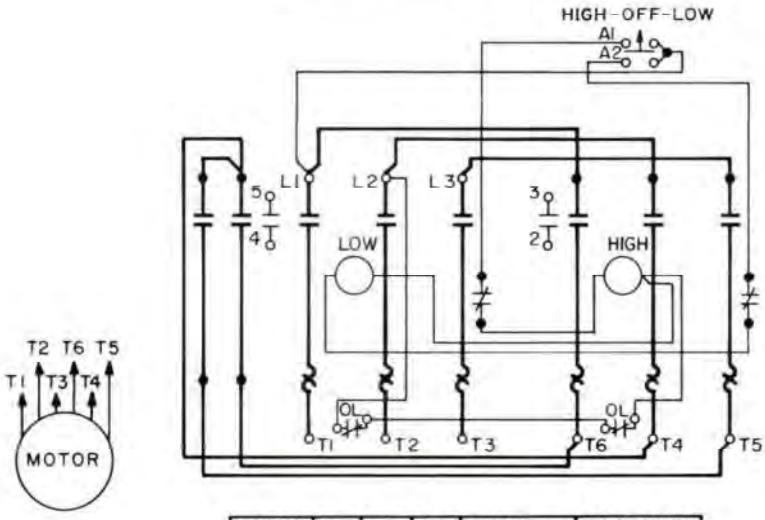

SPEED	L1	L2	L3	OPEN	TOGETHER
LOW	T1	T2	T3	———	T4,T5,T6
HIGH	T6	T4	T5	T1 , T2 , T3	———

Size 0 Starter with HIGH-OFF-LOW Selector Switch (Form C7) for Two Speed, One Winding (Consequent Pole), Constant Horsepower, 3 Phase Motor

ELEMENTARY DIAGRAMS OF SPECIAL CONTROL CIRCUITS USED WITH TWO SPEED MAGNETIC STARTERS

1

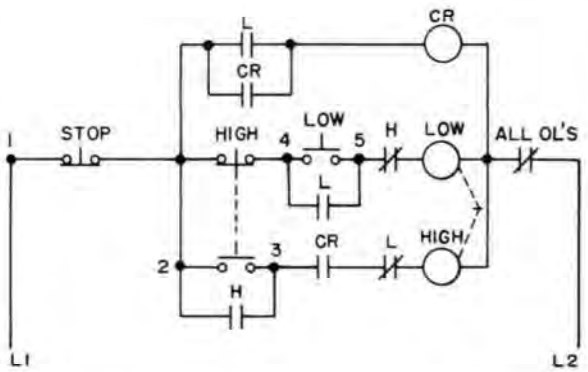

Control Circuit Using a Compelling Relay, Requiring the Motor to be Started In Low Speed (Form R1)

2

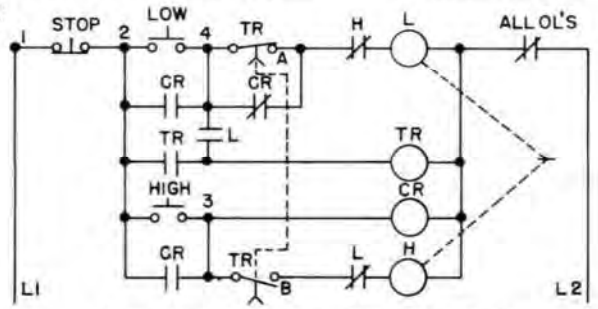

Control Circuit Using an Accelerating Relay Which Provides Timed Acceleration to Selected Speed (Form R2)

3

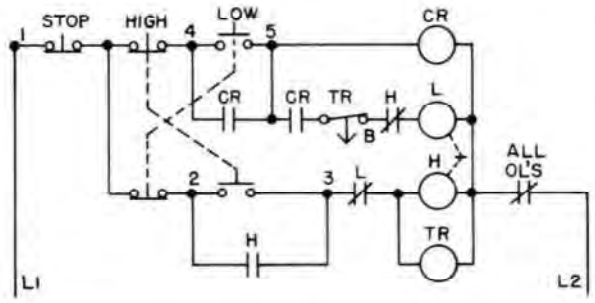

Control Circuit Using a Decelerating Relay Imposing a Time Delay During Transfer From a Higher to a Lower Speed (Form R3)

4

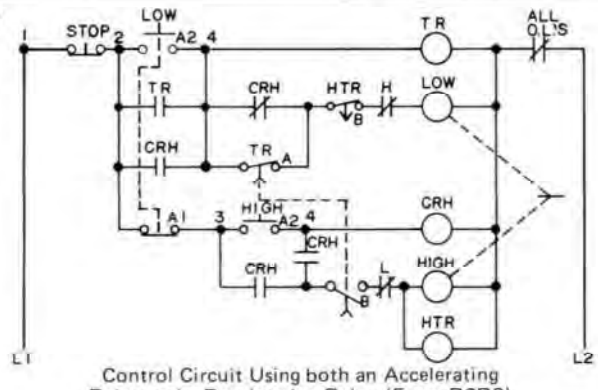

Control Circuit Using both an Accelerating Relay and a Decelerating Relay (Form R2R3)

5

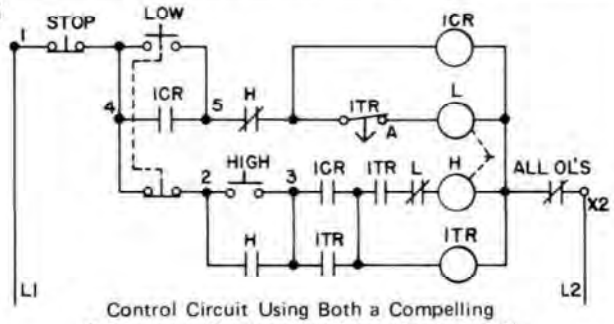

Control Circuit Using Both a Compelling Relay and a Decelerating Relay (Form R1R3)

6

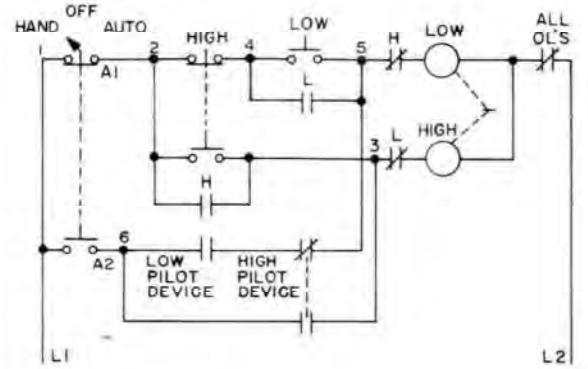

Control Circuit Using a HAND-OFF-AUTO Selector Switch and a HIGH-LOW Push Button (Form A10C)

7

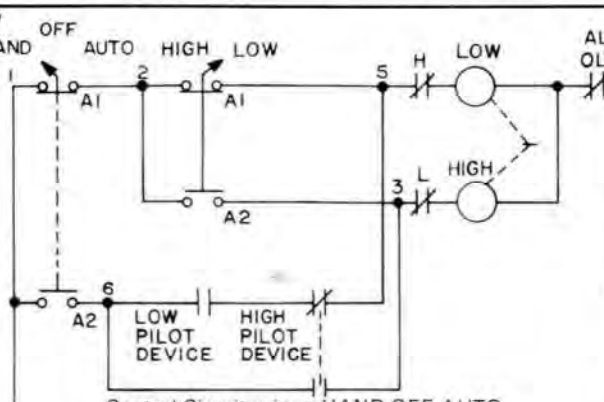

Control Circuit using a HAND-OFF-AUTO Selector Switch and a HIGH-LOW Selector Switch (Form CC17)

1

NOTE: THE FOLLOWING DIAGRAMS ARE TYPICAL MOTOR CONNECTION ARRANGEMENTS, CONFORMING TO NEMA STANDARDS. NOT ALL POSSIBLE ARRANGEMENTS ARE SHOWN.

3 PHASE 2 SPEED
1 WINDING CONSTANT HORSEPOWER

1

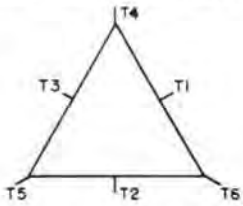

SPEED	L1	L2	L3	OPEN	TOGETHER
LOW	T1	T2	T3	—	T4, T5, T6
HIGH	T6	T4	T5	ALL OTHERS	—

3 PHASE 2 SPEED
1 WINDING CONSTANT TORQUE

2

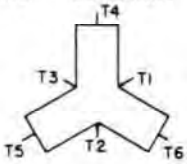

SPEED	L1	L2	L3	OPEN	TOGETHER
LOW	T1	T2	T3	ALL OTHERS	—
HIGH	T6	T4	T5	—	T1, T2, T3

3 PHASE 2 SPEED
1 WINDING VARIABLE TORQUE

3

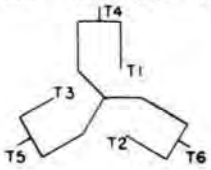

SPEED	L1	L2	L3	OPEN	TOGETHER
LOW	T1	T2	T3	ALL OTHERS	—
HIGH	T6	T4	T5	—	T1, T2, T3

3 PHASE 2 SPEED
SEPARATE WINDING

4

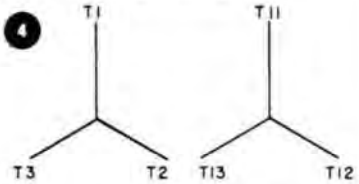

SPEED	L1	L2	L3	OPEN
LOW	T1	T2	T3	ALL OTHERS
HIGH	T11	T12	T13	ALL OTHERS

3 PHASE 2 SPEED
SEPARATE WINDING

5

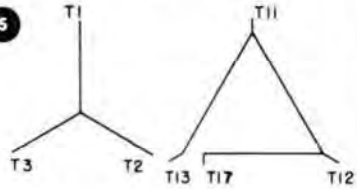

SPEED	L1	L2	L3	OPEN
LOW	T1	T2	T3	ALL OTHERS
HIGH	T11	T12	T13, T17	ALL OTHERS

3 PHASE 2 SPEED
SEPARATE WINDING

6

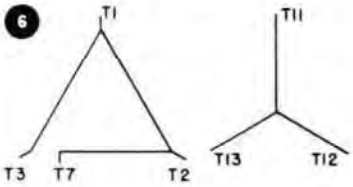

SPEED	L1	L2	L3	OPEN
LOW	T1	T2	T3, T7	ALL OTHERS
HIGH	T11	T12	T13	ALL OTHERS

3 PHASE 2 SPEED
SEPARATE WINDING

7

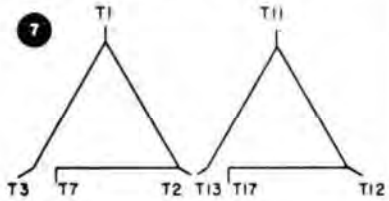

SPEED	L1	L2	L3	OPEN
LOW	T1	T2	T3, T7	ALL OTHERS
HIGH	T11	T12	T13, T17	ALL OTHERS

2 PHASE 2 SPEED
1 WINDING VARIABLE TORQUE

8

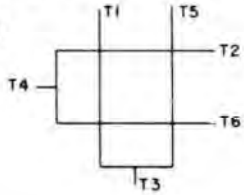

SPEED	L1	L3	L2	L4	OPEN
LOW	T1	T5	T2	T6	T3, T4
HIGH	T1, T5	T3	T2, T6	T4	—

2 PHASE 2 SPEED
SEPARATE WINDING

9

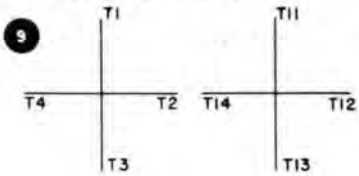

SPEED	L1	L3	L2	L4	OPEN
LOW	T1	T3	T2	T4	ALL OTHERS
HIGH	T11	T13	T12	T14	ALL OTHERS

3 PHASE 3 SPEED
2 WINDING CONSTANT HORSEPOWER

10

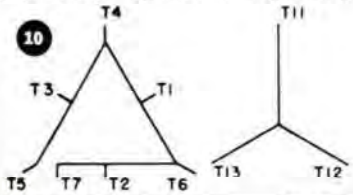

SPEED	L1	L2	L3	OPEN	TOGETHER
LOW	T1	T2	T3	ALL OTHERS	T4, T5, T6, T7
2ND	T6	T4	T5, T7	ALL OTHERS	—
HIGH	T11	T12	T13	ALL OTHERS	—

3 PHASE 3 SPEED
2 WINDING CONSTANT HORSEPOWER

11

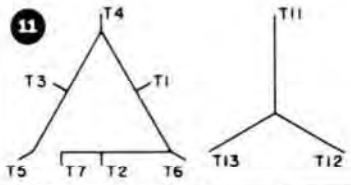

SPEED	L1	L2	L3	OPEN	TOGETHER
LOW	T1	T2	T3	ALL OTHERS	T4, T5, T6, T7
2ND	T11	T12	T13	ALL OTHERS	—
HIGH	T6	T4	T5, T7	ALL OTHERS	—

3 PHASE 3 SPEED
2 WINDING CONSTANT HORSEPOWER

12

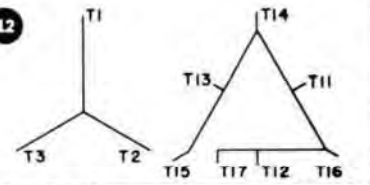

SPEED	L1	L2	L3	OPEN	TOGETHER
LOW	T1	T2	T3	ALL OTHERS	—
2ND	T11	T12	T13	ALL OTHERS	T14, T15, T16, T17
HIGH	T16	T14	T15, T17	ALL OTHERS	—

MULTISPEED MOTOR CONNECTIONS

1

NOTE: THE FOLLOWING DIAGRAMS ARE TYPICAL MOTOR CONNECTION ARRANGEMENTS, CONFORMING TO NEMA STANDARDS. NOT ALL POSSIBLE ARRANGEMENTS ARE SHOWN.

3 PHASE 3 SPEED
2 WINDING CONSTANT TORQUE

13

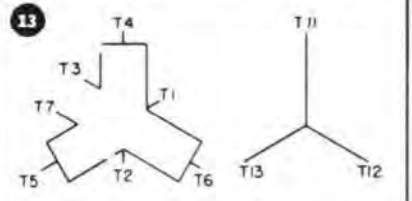

SPEED	L1	L2	L3	OPEN	TOGETHER
LOW	T1	T2	T3,T7	ALL OTHERS	——
2ND	T6	T4	T5	ALL OTHERS	T1,T2,T3,T7
HIGH	T11	T12	T13	ALL OTHERS	——

3 PHASE 3 SPEED
2 WINDING CONSTANT TORQUE

14

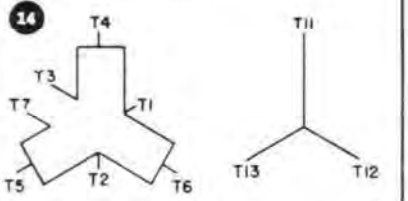

SPEED	L1	L2	L3	OPEN	TOGETHER
LOW	T1	T2	T3,T7	ALL OTHERS	——
2ND	T11	T12	T13	ALL OTHERS	——
HIGH	T6	T4	T5	ALL OTHERS	T1,T2,T3,T7

3 PHASE 3 SPEED
2 WINDING CONSTANT TORQUE

15

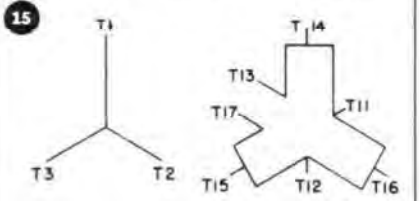

SPEED	L1	L2	L3	OPEN	TOGETHER
LOW	T1	T2	T3	ALL OTHERS	——
2ND	T11	T12	T13,T17	ALL OTHERS	——
HIGH	T16	T14	T15	ALL OTHERS	T11,T12,T13,T17

3 PHASE 3 SPEED
2 WINDING VARIABLE TORQUE

16

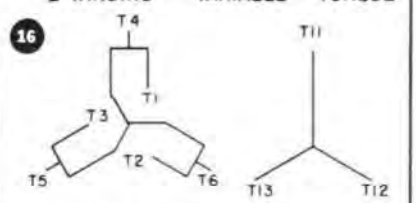

SPEED	L1	L2	L3	OPEN	TOGETHER
LOW	T1	T2	T3	ALL OTHERS	——
2ND	T6	T4	T5	ALL OTHERS	T1, T2, T3
HIGH	T11	T12	T13	ALL OTHERS	——

3 PHASE 3 SPEED
2 WINDING VARIABLE TORQUE

17

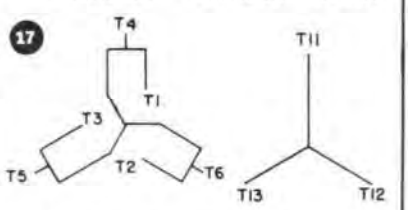

SPEED	L1	L2	L3	OPEN	TOGETHER
LOW	T1	T2	T3	ALL OTHERS	——
2ND	T11	T12	T13	ALL OTHERS	——
HIGH	T6	T4	T5	ALL OTHERS	T1, T2, T3

3 PHASE 3 SPEED
2 WINDING VARIABLE TORQUE

18

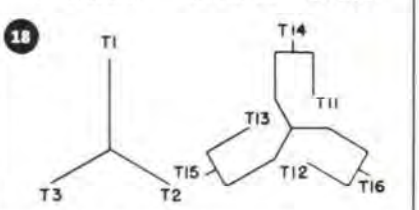

SPEED	L1	L2	L3	OPEN	TOGETHER
LOW	T1	T2	T3	ALL OTHERS	——
2ND	T11	T12	T13	ALL OTHERS	——
HIGH	T16	T14	T15	ALL OTHERS	T11, T12, T13

3 PHASE 4 SPEED
2 WINDING CONSTANT HORSEPOWER

19

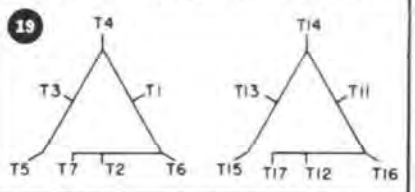

SPEED	L1	L2	L3	OPEN	TOGETHER
LOW	T1	T2	T3	ALL OTHERS	T4,T5,T6,T7
2ND	T6	T4	T5,T7	ALL OTHERS	——
3RD	T11	T12	T13	ALL OTHERS	T14,T15,T16,T17
HIGH	T16	T14	T15,T17	ALL OTHERS	——

3 PHASE 4 SPEED
2 WINDING CONSTANT HORSEPOWER

20

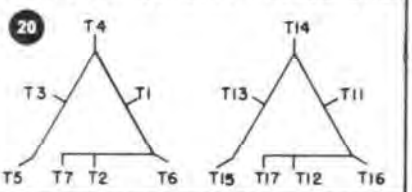

SPEED	L1	L2	L3	OPEN	TOGETHER
LOW	T1	T2	T3	ALL OTHERS	T4,T5,T6,T7
2ND	T11	T12	T13	ALL OTHERS	T14,T15,T16,T17
3RD	T6	T4	T5,T7	ALL OTHERS	——
HIGH	T16	T14	T15,T17	ALL OTHERS	——

3PHASE 4 SPEED
2 WINDING CONSTANT TORQUE

21

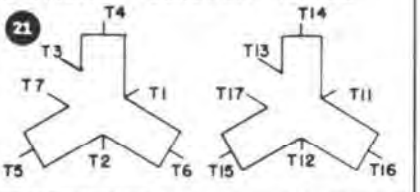

SPEED	L1	L2	L3	OPEN	TOGETHER
LOW	T1	T2	T3,T7	ALL OTHERS	——
2ND	T6	T4	T5	ALL OTHERS	T1,T2,T3,T7
3RD	T11	T12	T13,T17	ALL OTHERS	——
HIGH	T16	T14	T15	ALL OTHERS	T11,T12,T13,T17

3 PHASE 4 SPEED
2 WINDING CONSTANT TORQUE

22

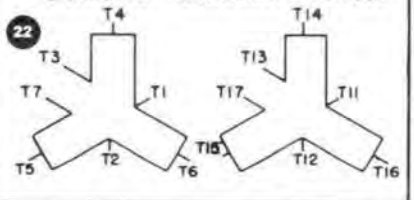

SPEED	L1	L2	L3	OPEN	TOGETHER
LOW	T1	T2	T3,T7	ALL OTHERS	——
2ND	T11	T12	T13,T17	ALL OTHERS	——
3RD	T6	T4	T5	ALL OTHERS	T1,T2,T3,T7
HIGH	T16	T14	T15	ALL OTHERS	T11,T12,T13,T17

3 PHASE 4 SPEED
2 WINDING VARIABLE TORQUE

23

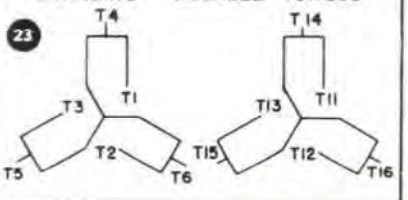

SPEED	L1	L2	L3	OPEN	TOGETHER
LOW	T1	T2	T3	ALL OTHERS	——
2ND	T6	T4	T5	ALL OTHERS	T1, T2, T3
3RD	T11	T12	T13	ALL OTHERS	——
HIGH	T16	T14	T15	ALL OTHERS	T11, T12, T13

3 PHASE 4 SPEED
2 WINDING VARIABLE TORQUE

24

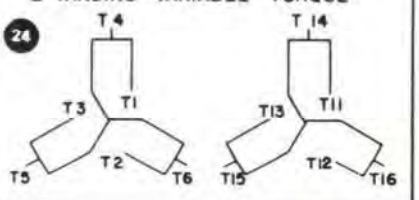

SPEED	L1	L2	L3	OPEN	TOGETHER
LOW	T1	T2	T3	ALL OTHERS	——
2ND	T11	T12	T13	ALL OTHERS	——
3RD	T6	T4	T5	ALL OTHERS	T1,T2, T3
HIGH	T16	T14	T15	ALL OTHERS	T11,T12,T13

SYNCHRONOUS MOTOR STARTERS - FULL VOLTAGE TYPE LOW VOLTAGE

CLASS 8820

1

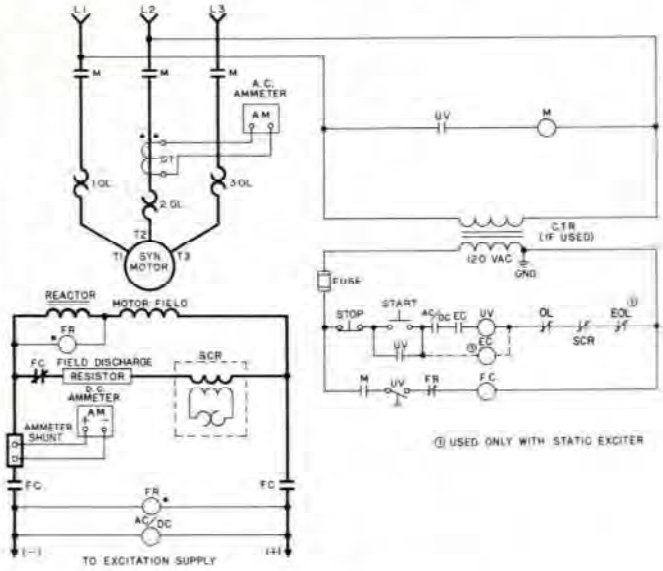

Elementary Diagram of Full-Voltage Synchronous Starter

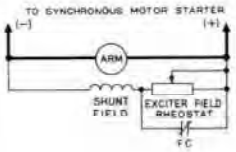

Motor Generator Set

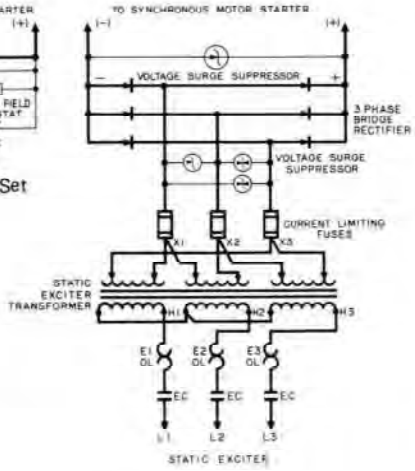

Types of dc Excitation Supplies

SYNCHRONOUS MOTOR STARTERS - AUTOTRANSFORMER TYPE LOW VOLTAGE

CLASS 8822

2

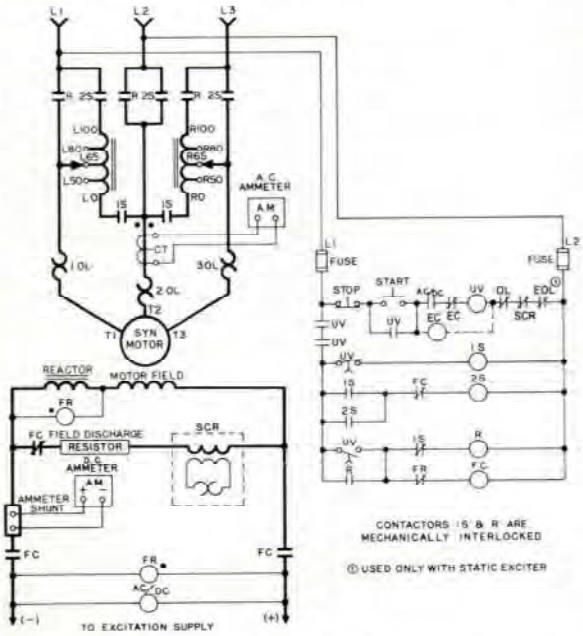

Elementary Diagram of Reduced Voltage (Autotransformer Type) Synchronous Starter

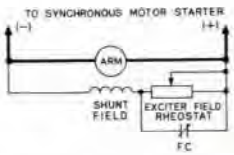

Motor Generator Set

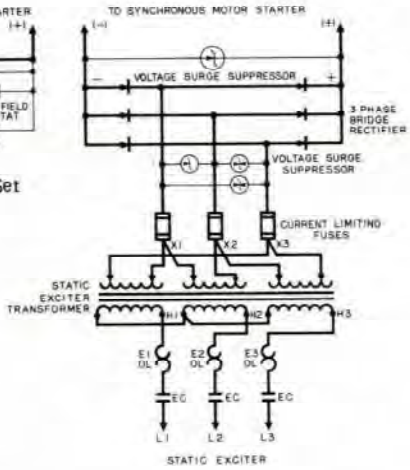

Types of dc Excitation Supplies

AUTOMATIC TRANSFER SWITCHES

1

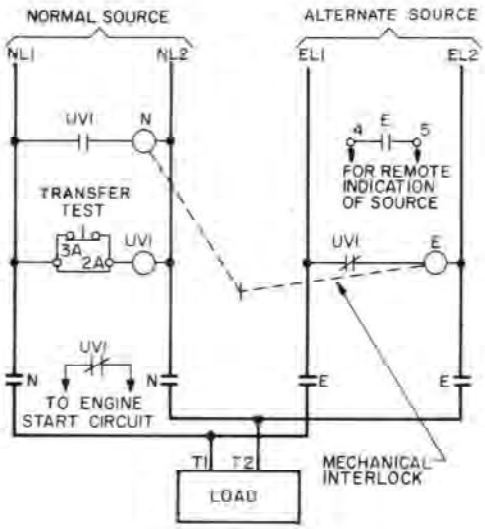

UV1 – Undervoltage and transfer logic relay, engine start contact
N – Normal source contactor
E – Alternate source contactor

Elementary Diagram for a Single Phase, 2 Wire Electrically Held Automatic Transfer Switch

2

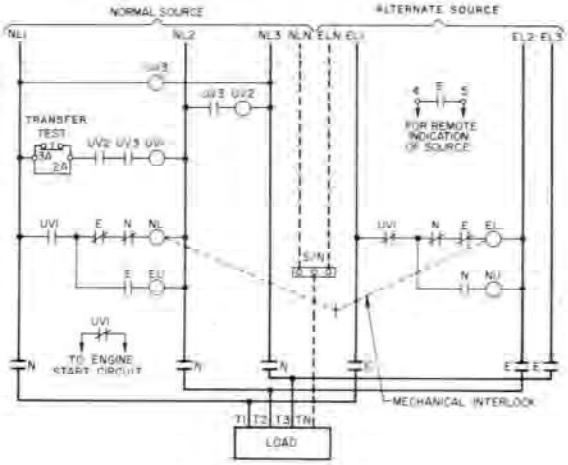

UV2, UV3 – Undervoltage relays
UV1 – Undervoltage and transfer logic relay, engine start contact
NL & EL – Normal and alternate contactor latch coils
NU & EU – Normal and alternate contactor unlatch coils
N & E – Normal and alternate contactor coil clearing contacts
N & E – Normal and alternate contactor power poles and logic circuit contacts

Elementary Diagram for a 3 Phase, 4 Wire Mechanically Held Automatic Transfer Switch

3

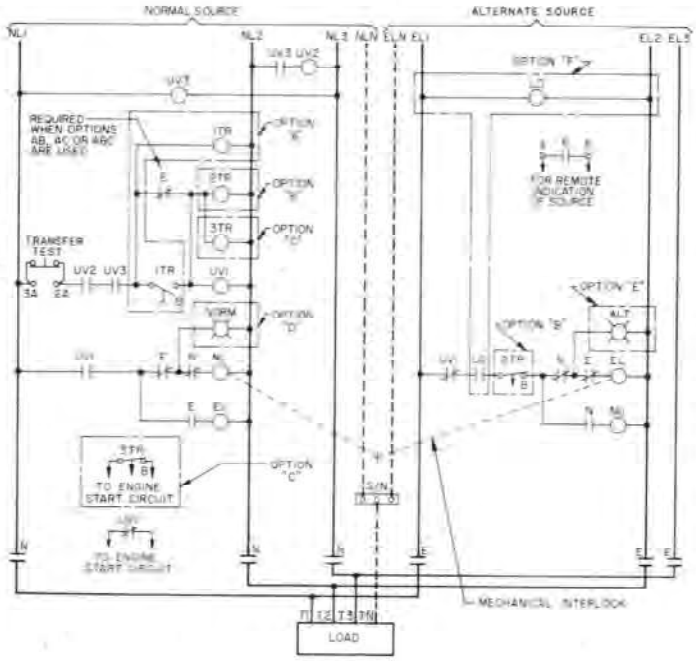

UV2, UV3 – Undervoltage relays
UV1 – Undervoltage and transfer logic relay, engine start contact
NL & EL – Normal and alternate contactor latch coils
NU & EU – Normal and alternate contactor unlatch coils
N & E – Normal and alternate contactor coil clearing contacts
N & E – Normal and alternate contactor power poles and logic circuit contacts
TEST – Form Y29 transfer test switch
OPTION "A" – Form K (1TR) - time delay alternate to normal
OPTION "B" – Form K8 (2TR) - time delay normal to alternate
OPTION "C" – Form K9 (3TR) - time delay cranking of emergency generator
OPTION "D" – Form P2 (Norm) - pilot light on normal source
OPTION "E" – Form P1 (Alt.) - Pilot light on alternate source
OPTION "F" – Form Y135 (Lo) - lockout of alternate source until engine generator reaches 90% of nominal voltage

Elementary Diagram for 3 Phase, 4 Wire, Mechanically Held Automatic Transfer Switch with Optional Forms

AC LIGHTING CONTACTORS - LOAD CONNECTIONS▲

1

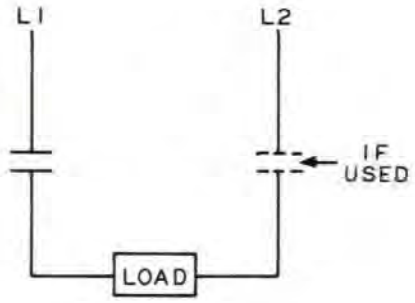

SINGLE PHASE 2-WIRE
(SINGLE LOAD)
$V_{load} = V_{line\text{-}to\text{-}line}$

2

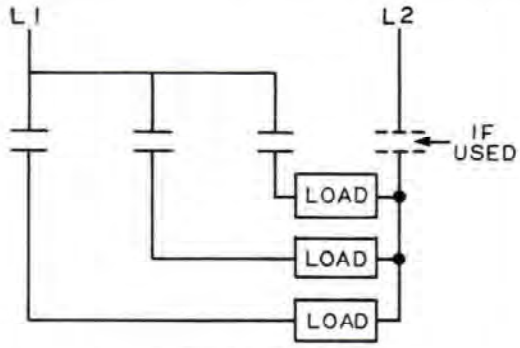

SINGLE PHASE 2-WIRE
(MULTIPLE LOADS)
$V_{load} = V_{line\text{-}to\text{-}line}$

3

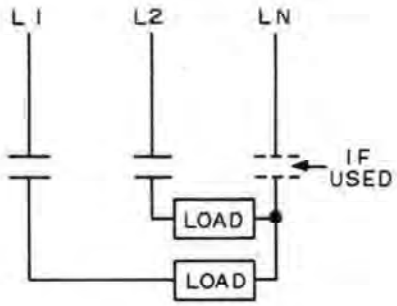

SINGLE PHASE 3-WIRE
(LOADS CONNECTED LINE-TO-NEUTRAL)
$V_{load} = V_{line\text{-}to\text{-}neutral}$

4

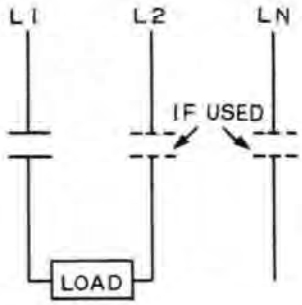

SINGLE PHASE 3-WIRE
(LOAD CONNECTED LINE-TO-LINE)
$V_{load} = V_{line\text{-}to\text{-}line}$

5

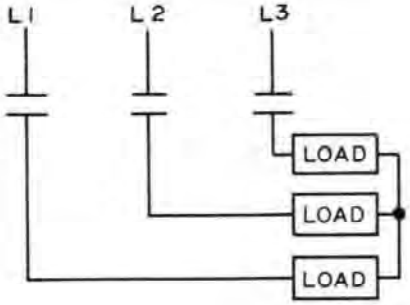

THREE PHASE 3-WIRE
(WYE-CONNECTED LOAD)
$V_{load} = \frac{V_{line\text{-}to\text{-}line}}{1.732}$

6

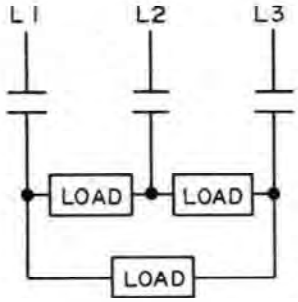

THREE PHASE 3-WIRE
(DELTA-CONNECTED LOAD)
$V_{load} = V_{line\text{-}to\text{-}line}$

7

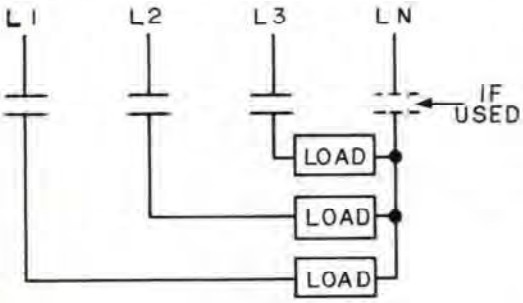

THREE PHASE 4-WIRE
(LOADS CONNECTED LINE-TO-NEUTRAL)
$V_{load} = V_{line\text{-}to\text{-}neutral}$

APPLICATION LIMITS

1. Voltage between line side conductors must not exceed line-to-line voltage rating of contactor.
2. V_{load} must not exceed volts per load rating of contactor.
3. Line current carried by any contact must not exceed ampere rating of contactor.

▲FOR CONTACT RATINGS, REFER TO DIGEST.

AC LIGHTING CONTACTORS - CONTROL CIRCUIT CONNECTIONS

1

ELECTRICALLY HELD CONTACTORS

"ON-OFF" PUSHBUTTON (FORM A12 MODIFICATION)

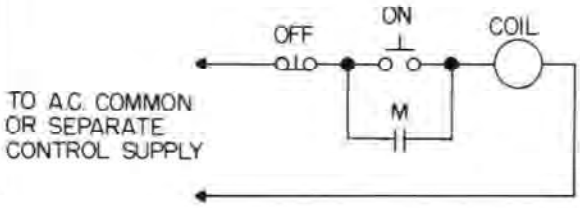

DIRECT CONTROL FROM PILOT DEVICE

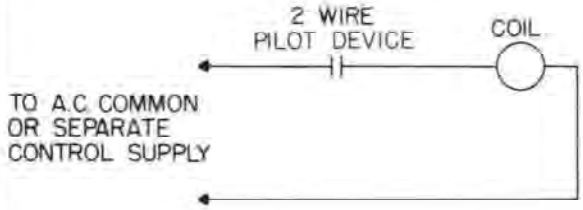

"ON-OFF" SELECTOR SWITCH (FORM C6 MODIFICATION)

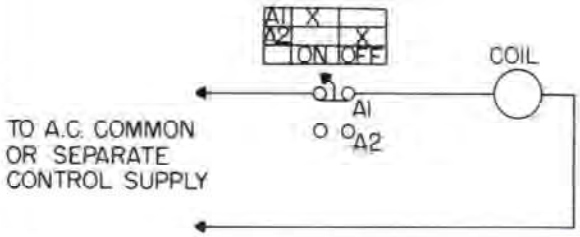

"HAND-OFF-AUTO" SELECTOR SWITCH (FORM C MODIFICATION)

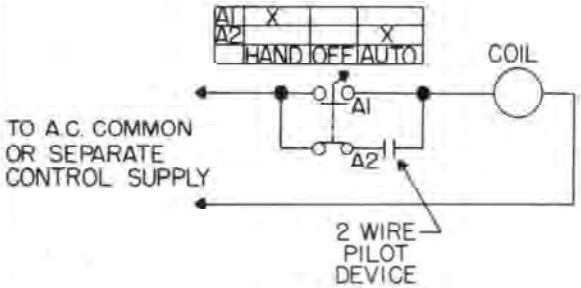

MECHANICALLY HELD CONTACTORS

"ON-OFF" PUSHBUTTON (FORM A3 MODIFICATION)

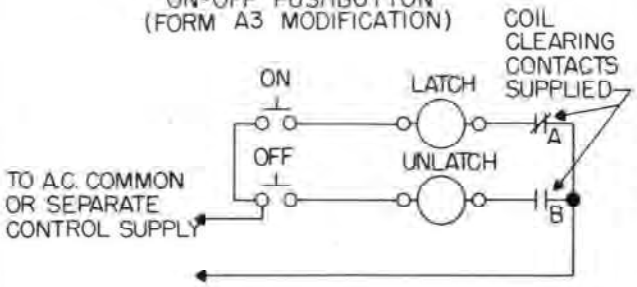

"ON-OFF" SELECTOR SWITCH (FORM C6 MODIFICATION)

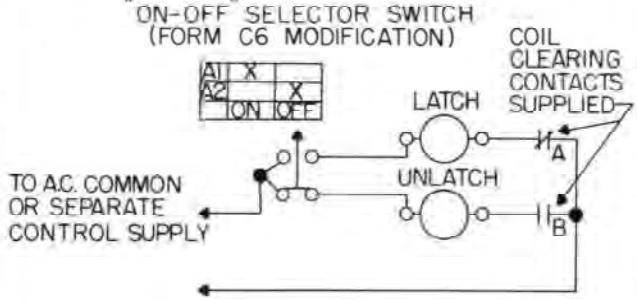

2 POLE PILOT DEVICE

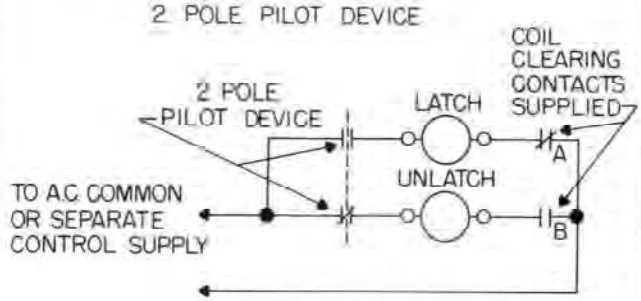

1 POLE PILOT DEVICE (FORM R6 MODIFICATION PROVIDES RELAY CR)

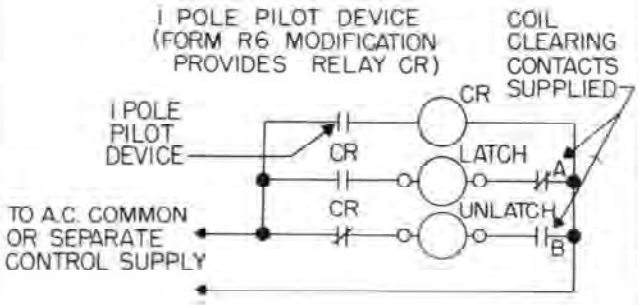

1

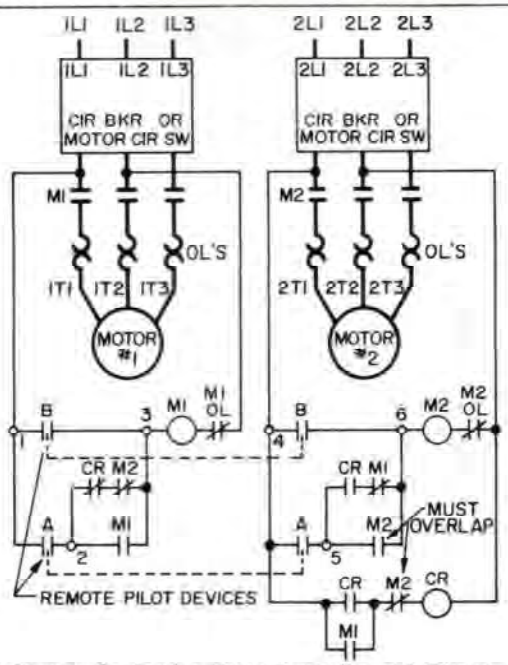

Elementary Diagram for Duplex Motor Controller with Electric Alternator

TYPE B

2

1 Pole

3

2 Pole

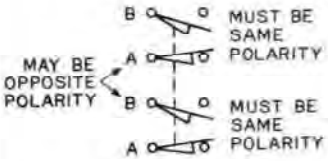

4

2 Pole Neutral Position ▲

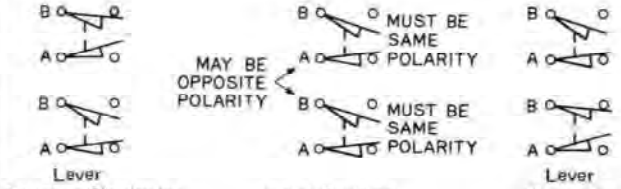

▲Contact sequence shown applies to plug-in devices only. Sequence is reversed in non-plug-in devices. Sequence may also be reversed if head of switch is rotated from standard position.

TYPE AW

5

Types AW-12, AW-14

6

Type AW-16 with Lever Arm Opposite Conduit Hole *

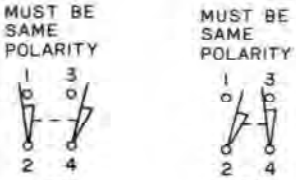

7

Type AW-18

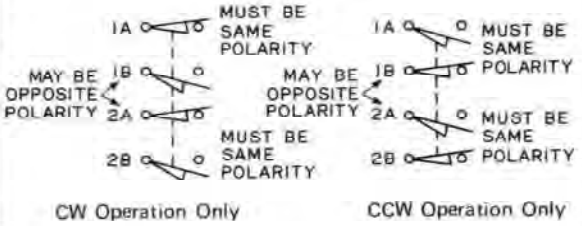

8

Type AW-19 with Lever Arm Opposite Conduit Hole *

9

Types AW-32, 34, 42, 44

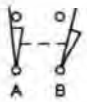

10

Types AW-36, AW-46

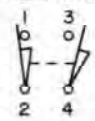

11

Types AW-38, AW-48

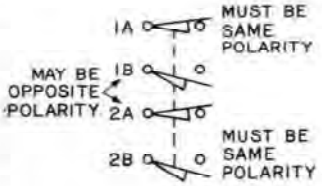

12

Types AW-39 AW-49

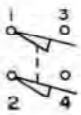

*If lever arm is placed at same end of box as conduit, then normally open contacts become normally closed and vice versa.

CLASS 9039

AC AND DC AUTOMATIC ELECTRIC ALTERNATORS FOR DUPLEX PUMP INSTALLATIONS

1

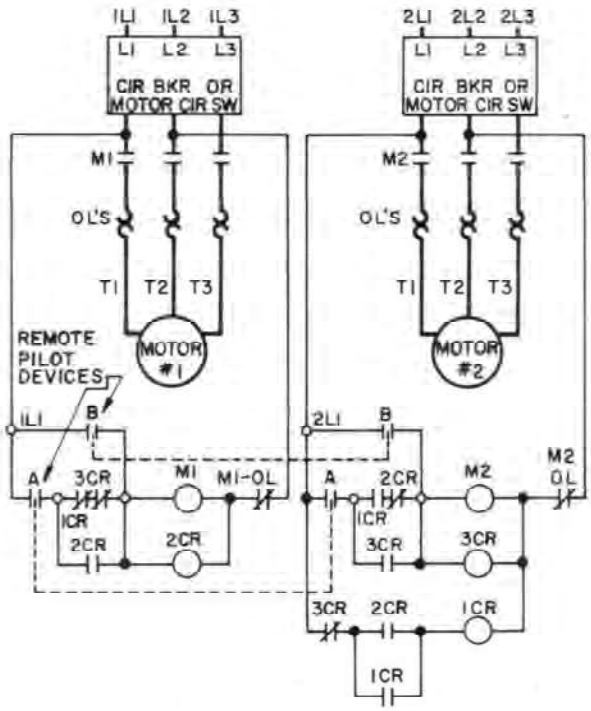

Elementary Diagram for Electric Alternator for Duplex Pump Installations

CLASS 9050

PNEUMATIC TIMING RELAYS TYPES A AND H

TYPE A

2 **ON Delay**

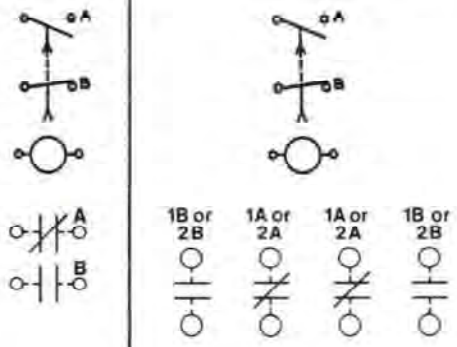

SPDT **ELECTRICAL INTERLOCK** (when furnished)

DPDT **ELECTRICAL INTERLOCK** (when furnished)

3 **OFF Delay**

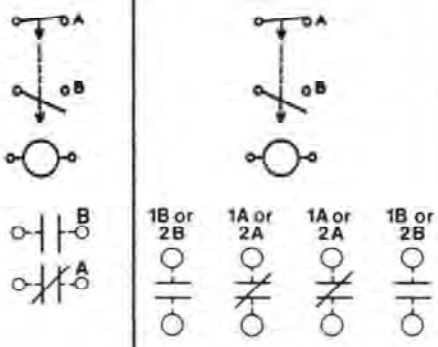

SPDT **ELECTRICAL INTERLOCK** (when furnished)

DPDT **ELECTRICAL INTERLOCK** (when furnished)

TYPE H

4

ON DELAY

5

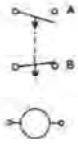

OFF DELAY

WIRING DIAGRAMS

1

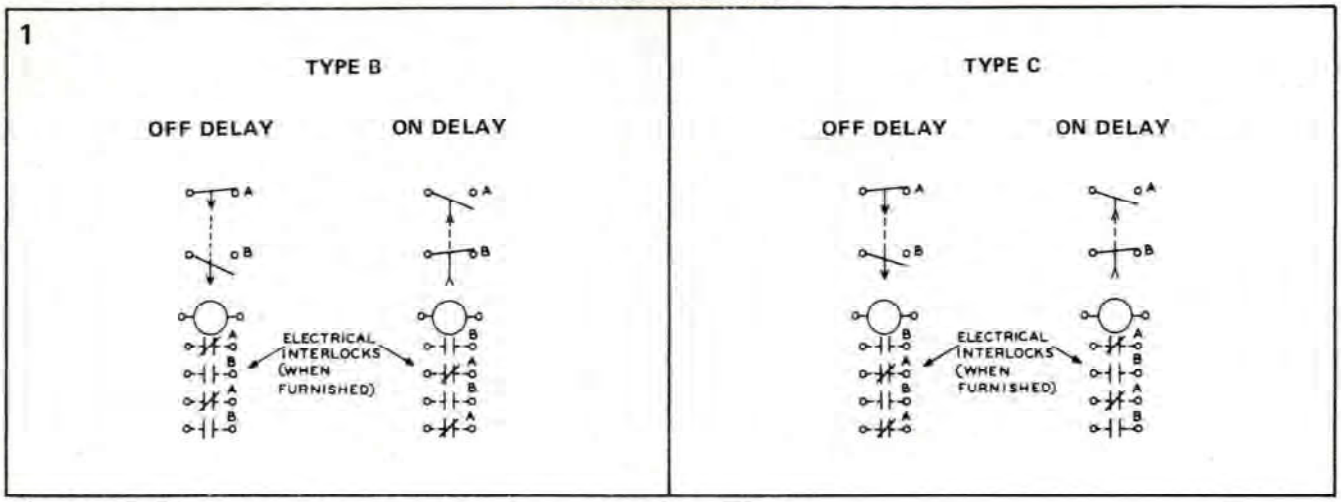

TYPICAL ELEMENTARY DIAGRAMS

3

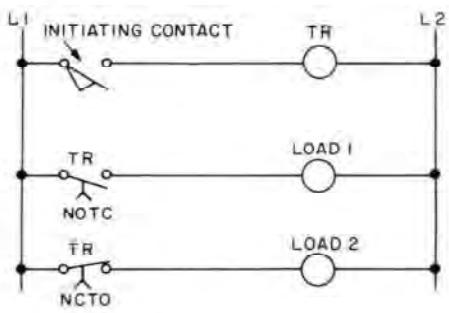

4

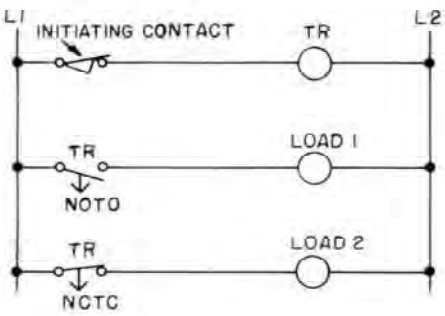

5

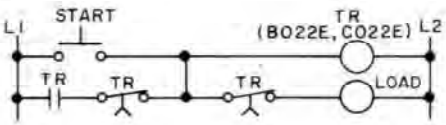

6

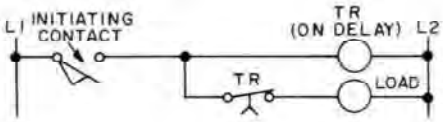

7

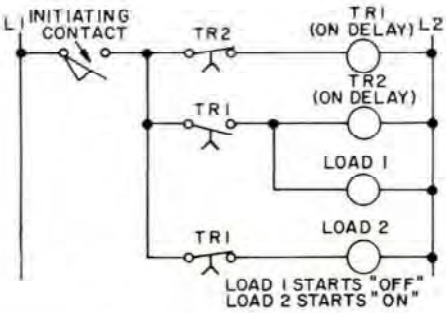

SOLID STATE INDUSTRIAL TIMING RELAYS

TYPE E

Timing Logic	Typical Elementary Diagram	Wiring Diagram

1 ON DELAY

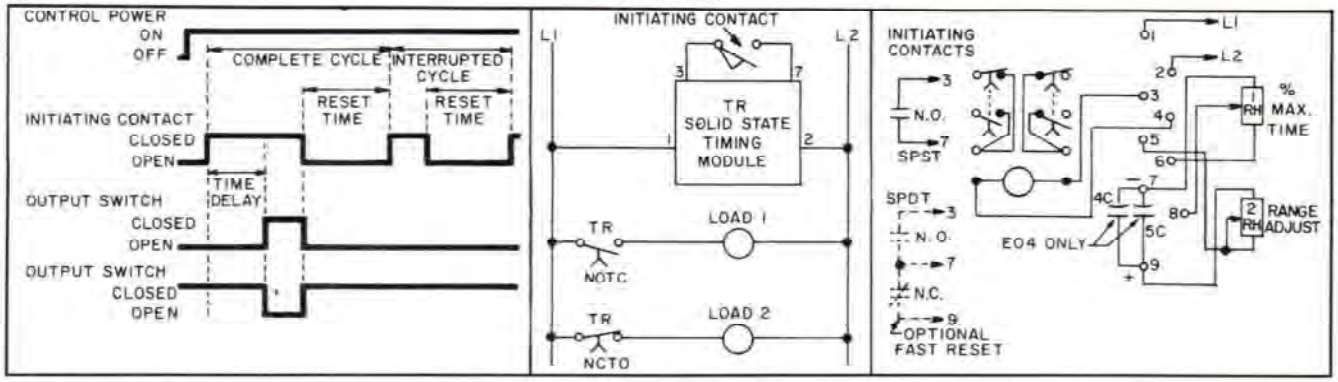

2 OFF DELAY — Initiating Contact Closed When Control Power First Applied

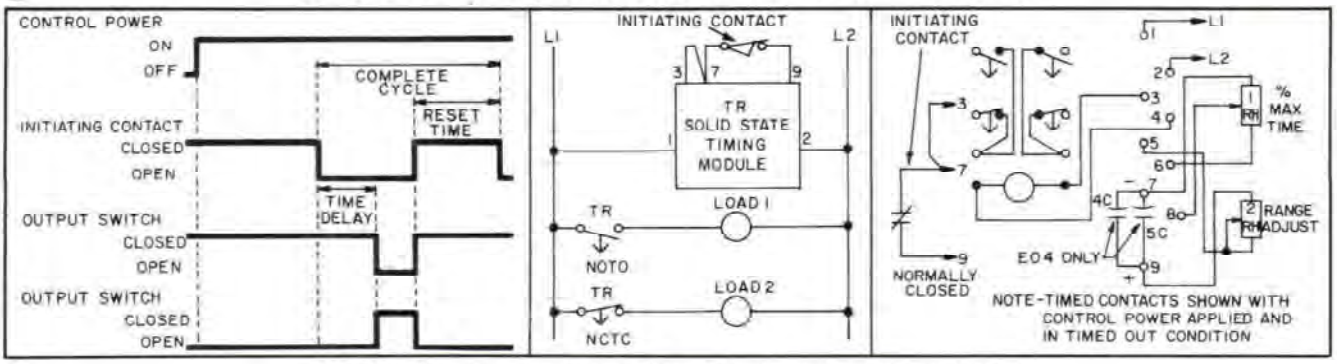

3 OFF DELAY — Initiating Contact Open When Control Power First Applied

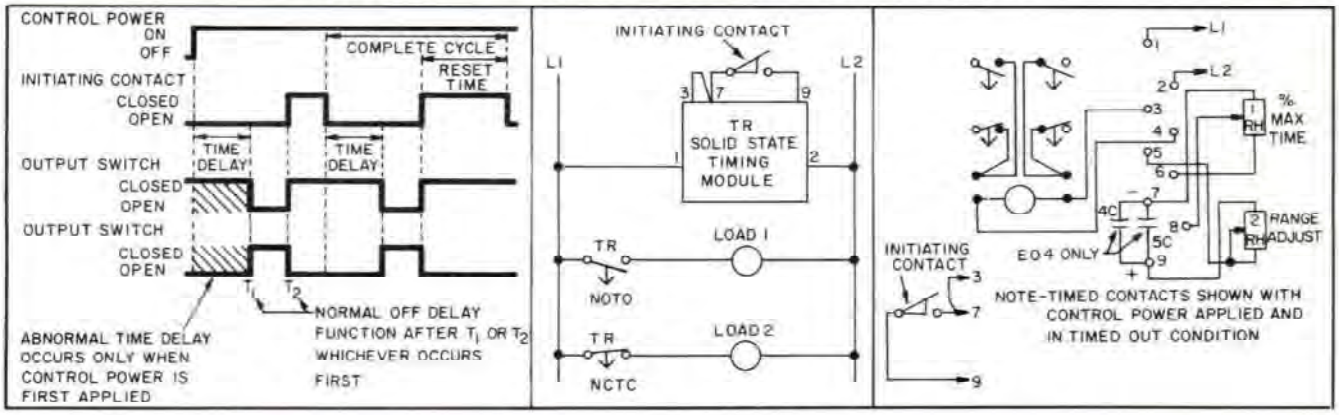

4 INTERVAL, MAINTAINED START

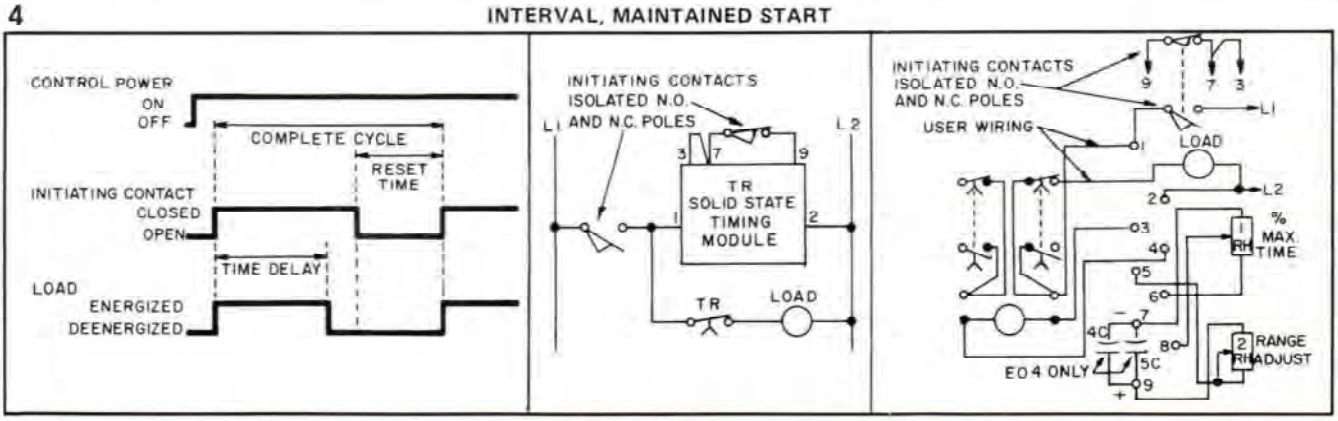

WIRING DIAGRAMS

1

ON AND OFF DELAY

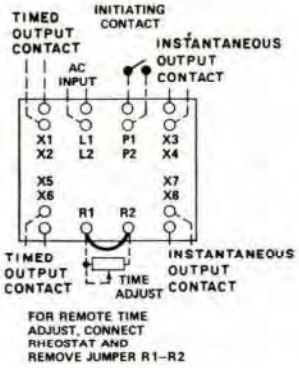

TYPES
TO-10D1,2&3
TO-10E1,2&3

REPEAT CYCLE

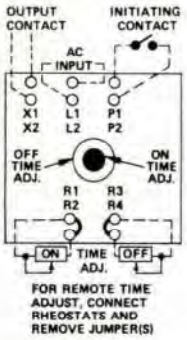

TYPE
TO-10R3

TYPICAL ELEMENTARY DIAGRAMS

ON DELAY or, INTERVAL, MAINTAINED START

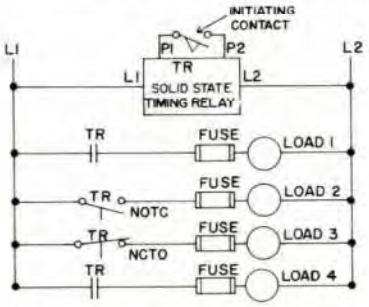

4

OFF DELAY

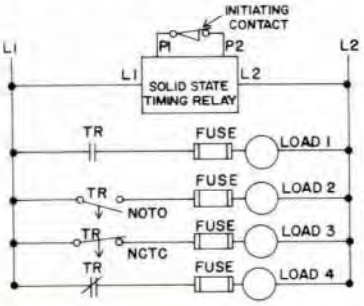

5

REPEAT CYCLE

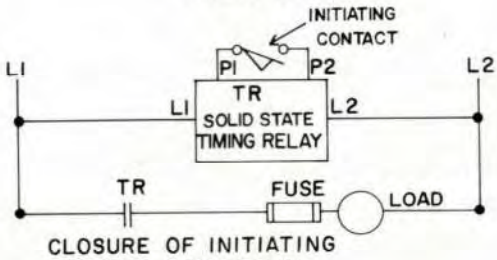

CLOSURE OF INITIATING CONTACT RESULTS IN INSTANTANEOUS TRANSFER OF CONTACT TR.

DIGITAL SOLID STATE TIMER

TYPE X

ON DELAY (Maintained Initiating Contact)	Comments	Timing Sequence Chart
1 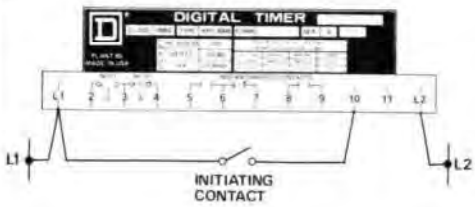	Initiating contact closure begins time delay. Timed contacts are activated at end of time delay. Timer resets whenever the initiating contact opens. Caution: Do not connect load(s) between terminals 10 and L2 or between terminals 11 and L2.	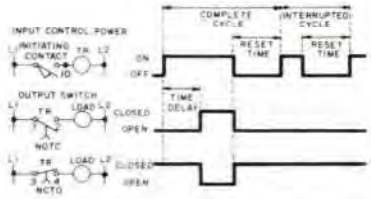

ON DELAY (Using 3-Wire Control)	Comments	Timing Sequence Chart
2 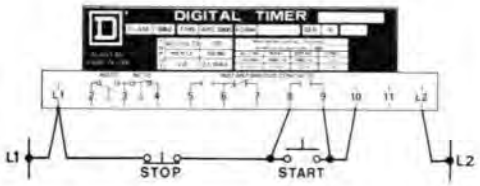	Start Button contact closure begins time delay. Timed contacts are activated at end of time delay. Timer resets whenever the stop button contact opens. Caution: Do not connect load(s) between terminals 10 and L2 or between terminals 11 and L2.	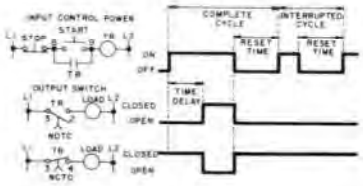

INTERVAL MOMENTARY START (Momentary Initiating Contact)	Comments	Timing Sequence Chart
3 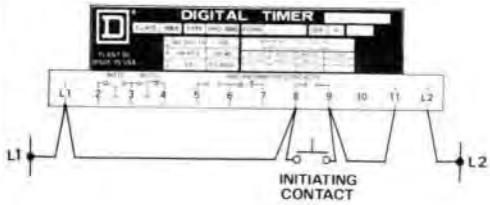	Momentary initiating contact closure begins time delay and activates instantaneous contacts. At end of time delay period, timer resets automatically. Caution: Do not connect load(s) between terminals 10 and L2 or between terminals 11 and L2.	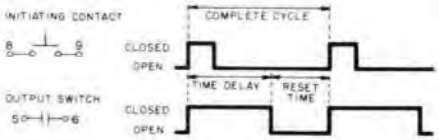

SEQUENCING TWO LOADS (Using Two Timers)	Elementary Diagrams	Timing Sequence Chart
4 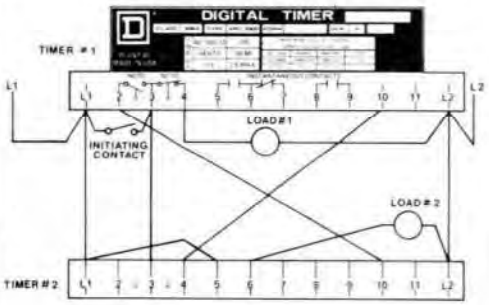	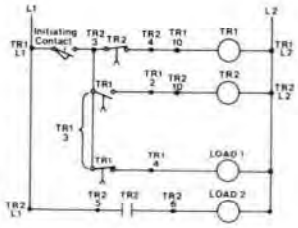 Caution: Do not connect load(s) between terminals 10 and L2 or between terminals 11 and L2.	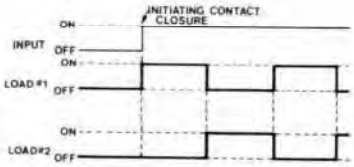

OFF DELAY	Comments	Timing Sequence Chart
1 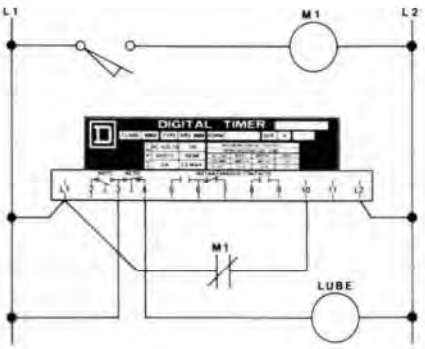	Closure of the limit switch contact energizes the motor starter (M1). This opens the normally closed M1 contact, resets the timer, closes the NCTO contact and energizes the lube pump starter. When the limit switch opens, the motor starter M1 drops out instantly closing the M1 contact and initiating the timer. At the end of the preset time period, the NCTO contact opens de-energizing the lube pump starter. Caution: Do not connect load(s) between terminals 10 and L2 or between terminals 11 and L2.	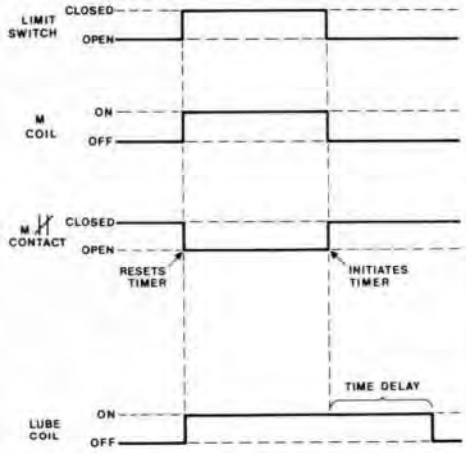
2 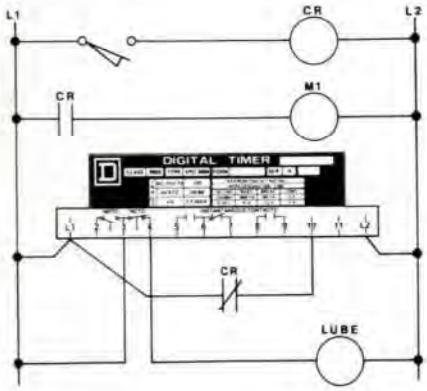	Closure of the limit switch contact energizes the CR relay and the motor starter (M1). This opens the normally closed CR contact, resets the timer, closes the NCTO contact and energizes the lube pump starter. When the limit switch opens, the CR relay and the motor starter M1 drop out instantly closing the CR contact and initiating the timer. At the end of the preset time period, the NCTO contact opens de-energizing the lube pump starter. Caution: Do not connect load(s) between terminals 10 and L2 or between terminals 11 and L2.	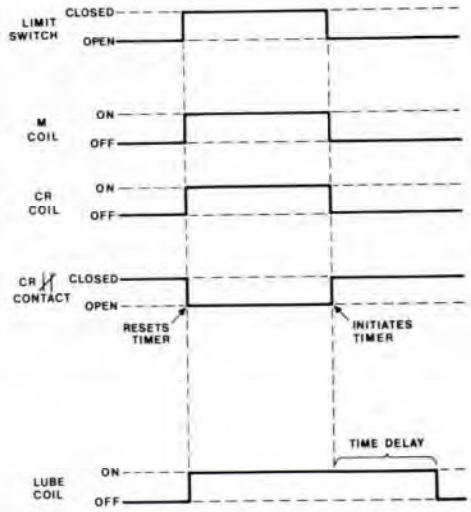
3 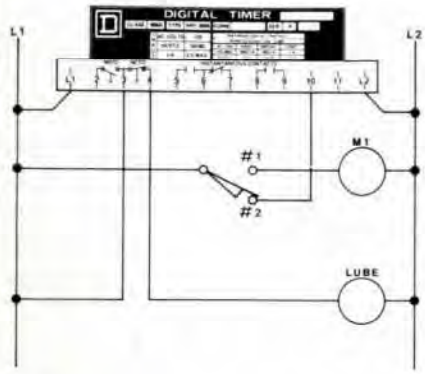	Closure of the limit switch contact energizes the motor starter (M1), resets the timer, closes the NCTO contact and energizes the lube pump starter. When the limit switch opens, it drops out motor starter M1 and initiates the timer. At the end of the preset time period, the NCTO contact opens de-energizing the lube pump starter. Caution: Do not connect load(s) between terminals 10 and L2 or between terminals 11 and L2.	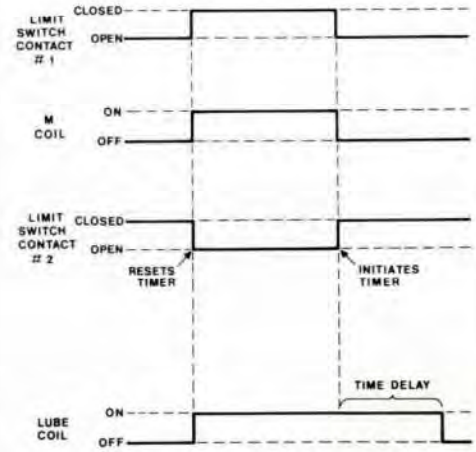

DIGITAL SOLID STATE PRESET COUNTER

TYPE C

MODE OF OPERATION	USER CONNECTION	COMMENTS
1 HARD CONTACT INPUTS MANUAL PRESET	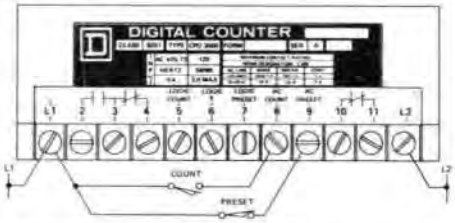	Counter will preset to the number shown on the thumbwheel switches when the preset switch is opened. Preset switch must be opened to initially preset the counter after L1-L2 power is applied. Preset switch must be closed before counting can commence and must remain closed during counting. Each closure of the count switch advances the counter one count.
2 HARD CONTACT INPUTS AUTOMATIC PRESET	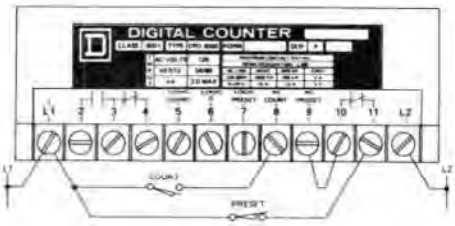	Counter will preset to the number shown on the thumbwheel switches when the preset switch is opened, or 1. the count of 000 is reached (when counter is in the down counting mode), or 2. the count of 999 is reached (when counter is in the up counting mode). Preset switch must be opened to initially preset the counter after L1-L2 power is applied. Preset switch must be closed before counting can commence and must remain closed during counting. Each closure of the count switch advances the counter one count.
3 NORPAK INPUTS MANUAL PRESET	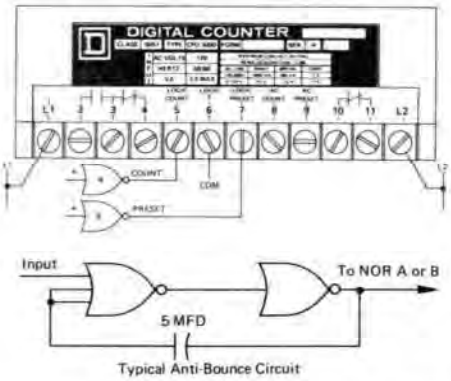	Counter will preset to the number shown on the thumbwheel switches when the output of NOR B is a logic "0." Output of NOR B must be a logic "0" to initially preset the counter after L1-L2 power is applied. Output of NOR B must be a logic "1" before counting can commence and must remain a logic "1" during counting. The counter will advance one count each time the output of NOR A switches from a logic "0" to a logic "1." Signals marked with * must be "bounce free." When required, use an anti-bounce circuit as shown to remove "bounce" from an Input Signal.
4 NORPAK INPUTS AUTOMATIC PRESET (using form N9)	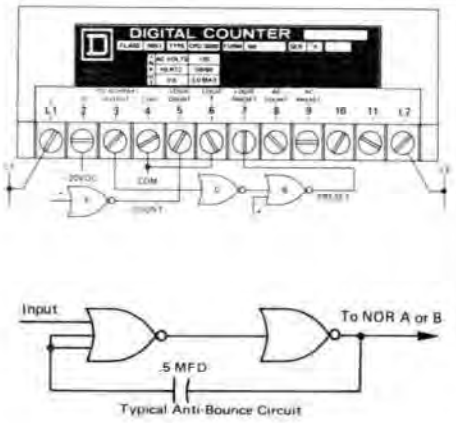 NOTE: Form N9 may also be used when operating the counter in the Manual Preset mode.	Counter must first be converted to Form N9 by substituting a Class 9050 Type XA-5 Logic Output Interface Module for the plug-in output relay. Counter will preset to the number shown on the thumbwheel switches when the output of NOR B is driven to a logic "0" by the * input, or 1. the count of 000 is reached (when counter is in the down counting mode), or 2. the count of 999 is reached (when counter is in the up counting mode). Output of NOR B must be driven to a logic "0" by its * input in order to initially preset the counter after L1-L2 power is applied. Output of NOR B must be a logic "1" before counting can commence and must remain a logic "1" during counting. The counter will advance one count each time the output of NOR A switches from a logic "0" to a logic "1." Signals marked with * must be "bounce free." When required, use an anti-bounce circuit as shown to remove "bounce" from an Input Signal. Four additional units of NORPAK logic load are available to the user at terminal 3.

MODE OF OPERATION	USER CONNECTION	COMMENTS
1 COS/MOS INPUTS MANUAL PRESET	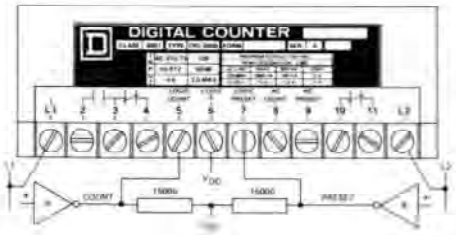	V_{SS} must be -12 to -15 VDC. V_{DD} is GND. COS/MOS logic elements are CD4049A inverters. Resistors are 1500 ohms, ±10%, 1/2 watt. Counter will preset to the number shown on the thumbwheel switches when the output of inverter B is HIGH (-0.5 volt or more positive). Output of inverter B must be HIGH to initially preset the counter after L1-L2 power is applied. Output of inverter B must be LOW (-10 volts or more negative) before counting can commence and must remain LOW during counting. The counter will advance one count each time the output of inverter A switches from HIGH to LOW. Signals marked with * must be "bounce free."
2 FILTERED DC VOLTAGE INPUTS MANUAL PRESET	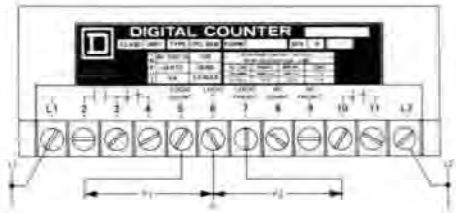	Voltages V_1 and V_2 must be bounce-free, filtered DC voltages with polarity as shown. Counter will preset to the number shown on the thumbwheel switches when V_2 is 0-0.5 VDC. V_2 must be 0-0.5 VDC to initially preset the counter after L1-L2 power is applied. V_2 must be 10-20 VDC before counting can commence and must remain 10-20 VDC during counting. The counter will advance one count each time V_1 switches from 0-0.5 VDC to 10-20 VDC. Typical sources for V_1 and V_2 are photocells, transistors, and transducers with solid state outputs.
3 EXTERNAL SWITCH AND LOGIC SIGNAL INPUTS MANUAL PRESET	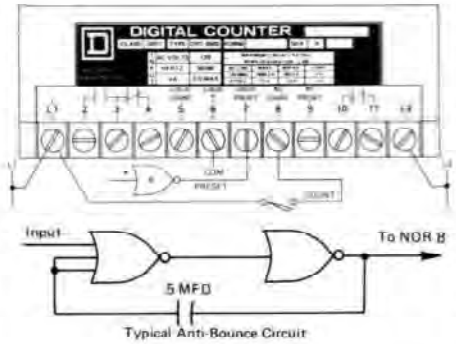	Counter will preset to the number shown on the thumbwheel switches when the output of NOR B is a logic "0." Output of NOR B must be a logic "0" to initially preset the counter after L1-L2 power is applied. Output of NOR B must be a logic "1" before counting can commence and must remain a logic "1" during counting. Signals marked with * must be "bounce free." When required, use an anti-bounce circuit as shown to remove "bounce" from an Input Signal. Each closure of the count switch advances the counter one count.
4 EXTERNAL SWITCH AND LOGIC SIGNAL INPUTS AUTOMATIC PRESET	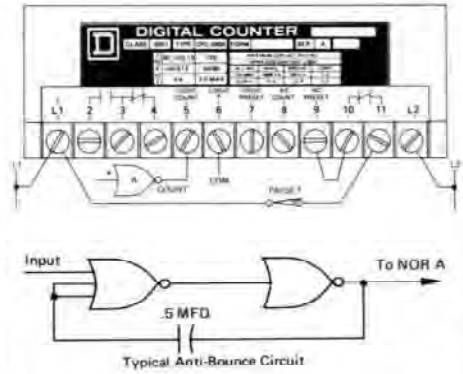	Counter will preset to the number shown on the thumbwheel switches when the preset switch is opened, or 1. the count of 000 is reached (when counter is in the down counting mode), or 2. the count of 999 is reached (when counter is in the up counting mode). Preset switch must be opened to initially preset the counter after L1-L2 power is applied. Preset switch must be closed before counting can commence and must remain closed during counting. The counter will advance one count each time the output of NOR A switches from a logic "0" to a logic "1." Signals marked with * must be "bounce free." When required, use an anti-bounce circuit as shown to remove "bounce" from an Input Signal.

30072-252-15-B

ENCLOSURE SELECTION GUIDE

The tables below may be used as guides in selecting enclosures for specific applications. The various types of enclosures available for each device are listed in the table headings of this Catalog Digest, DE Catalog and GIC Catalog. However, if local code requirements or unusual operating conditions require a different or modified type of enclosure, consult your local Square D Field Office with specific details. Special care should be used in the selection of enclosures for hazardous locations.

ENCLOSURES FOR NON-HAZARDOUS LOCATIONS

Provides Protection Against	Type of Enclosure								
	NEMA Type 1	NEMA Type 3◐	NEMA Type 3R◐	NEMA Type 4▲	NEMA Type 4X▲	Type 5	NEMA Type 12†	Type 12K	NEMA Type 13
Accidental contact with enclosed equipment	Yes	Yes	Yes	Yes	Yes	Yes	Yes	Yes	Yes
Falling dirt	Yes	Yes	Yes	Yes	Yes	Yes	Yes	Yes	Yes
Falling liquids and light splashing	...	Yes	Yes	Yes	Yes	...	Yes	Yes	Yes
Dust, lint, fibers and flyings	...	...	...	Yes	Yes	Yes	Yes	Yes	Yes
Hosedown and splashing water	...	...	...	Yes	Yes	...	...	...	...
Oil and coolant seepage	...	...	...	...	...	...	Yes	Yes	Yes
Oil and coolant spraying and splashing	...	...	...	...	...	...	...	...	Yes
Corrosive agents	...	...	...	...	Yes	...	...	...	...
Rain, snow and sleet‡	...	Yes	Yes	△	Yes	...	...	...	...
Windblown dust	...	Yes	...	△	Yes	Yes	...	...	...

ENCLOSURES FOR HAZARDOUS LOCATIONS

Provides Protection Against	Class*	Group*	Type of Enclosure					
			NEMA Type 7			NEMA Type 9		
			7B	7C	7D	9E	9F	9G
Hydrogen, manufactured gas	I	B	Yes	...	...	...	...	...
Ethyl ether, ethylene, cyclopropane	I	C	Yes	Yes	...	...	...	...
Gasoline, hexane, naphtha, benzine, butane, propane, alcohol, acetone, benzol, natural gas, lacquer solvent	I	D	Yes	Yes	Yes	...	...	...
Metal dust	II	E	...	...	...	Yes	...	...
Carbon black, coal dust, coke dust	II	F	...	...	...	Yes	Yes	...
Flour, starch, grain dust	II	G	...	...	...	Yes	Yes	Yes

◐Intended for outdoor use.
▲Intended for indoor and outdoor use.
†Square D Industrial Control design NEMA Type 12 enclosures may be field modified for outdoor applications.
‡External operating mechanisms are not required to be operable when the enclosure is ice covered.
*As described in Article 500 of the "National Electrical Code."
△Square D Industrial Control design NEMA Type 4 enclosures provide protection against these environments.

1978 NATIONAL ELECTRICAL CODE — WIRE & CONDUIT TABLES

CONDUCTORS 600 VOLTS, NOMINAL OR LESS (BASED ON AMBIENT TEMPERATURE OF 30°C, 86°F)

TRADE SIZE OF CONDUIT OR TUBING BASED ON 1978 NEC CHAPTER 9, TABLE 1 FOR 40% FILL AND TABLES 3A, 3B — NEW WORK OR REWIRING. REFER TO 1978 NEC CHAPTER 9 FOR MAXIMUM NUMBER OF CONDUCTORS IN TRADE SIZES OF CONDUIT OR TUBING.

(UNDERLINED INSULATION TYPE INDICATES DRY LOCATION ONLY RATINGS)

Table 310-16 Ampacity Insulated Copper	Table 310-18 Ampacity Insulated Aluminum & Copper Clad Aluminum	60° C (140° F) TW			75° C (167° F) THWN, †XHHW			75° C (167° F) †THW †RHW-RHH-USE Without Outer Covering			★ 90° C (194° F) FEP (14-2), THHN FEPB (14-2), †XHHW			★ 90° C (194° F) FEPB (6-2) †RHW-RHH-USE Without Outer Covering		
		Wire Size	Conduit 3W	‡Conduit 3φ 4W	Wire Size	Conduit 3W	‡Conduit 3φ 4W	Wire Size	Conduit 3W	‡Conduit 3φ 4W	Wire Size	Conduit 3W	‡Conduit 3φ 4W	Wire Size	Conduit 3W	‡Conduit 3φ 4W
15	...	#14	½	½	#14	½	½	#14◐	½	½	#14	½	½	#14	½	½
20	15	#12	½	½	#12	½	½	#12◐	½	½	#12	½	½	#12	½	½
30	25	#10	½	½	#10	½	½	#10◐	½	½	#10	½	½	#10	½	½
40	30	#8	¾	¾	....	....	....	....	....	....	....	....	....	....	....	....
45	40	....	....	....	#8	½●	¾	#8◐	¾	1	....	....	....	....	....	....
50	40	....	....	....	....	....	....	....	....	....	#8	½●	¾	#8	¾	1
55	40	#6	1	1	....	....	....	....	....	....	....	....	....	....	....	....
65	50	....	....	....	#6	¾	¾◆	#6	1	1	....	....	....	....	....	....
70	55	....	....	....	....	....	....	....	....	....	#6	¾	¾◆	#6	1	1
70	55	#4	1	1¼	....	....	....	....	....	....	....	....	....	....	....	....
80	65	#3	1¼	1¼	....	....	....	....	....	....	....	....	....	....	....	....
85 (100†)	65	....	....	....	#4	1	1	#4	1	1¼	....	....	....	....	....	....
90 (100†)	70	....	....	....	....	....	....	....	....	....	#4	1	1	#4	1	1¼
95	75	#2	1¼	1¼	....	....	....	....	....	....	....	....	....	....	....	....
100 (110†)	75	....	....	....	#3	1	1¼	#3	1¼	1¼	....	....	....	....	....	....
105 (110†)	80	....	....	....	....	....	....	....	....	....	#3	1	1¼	#3	1¼	1¼
110	85	#1	1¼	1½	....	....	....	....	....	....	....	....	....	....	....	....
115 (125†)	90 (100†)	....	....	....	#2	1	1¼	#2	1¼	1¼	....	....	....	....	....	....
120 (125†)	95 (100†)	....	....	....	....	....	....	....	....	....	#2	1	1¼	#2	1¼	1¼
125	100	0	1½	2	....	....	....	....	....	....	....	....	....	....	....	....
130 (150†)	100 (110†)	....	....	....	#1	1¼	1½	#1	1¼	1½	....	....	....	....	....	....
140 (150†)	110 (110†)	....	....	....	....	....	....	....	....	....	#1	1¼	1½	#1	1¼	1½
145	115	00	1½	2	....	....	....	....	....	....	....	....	....	....	....	....
150 (175†)	120 (125†)	....	....	....	0	1¼	1½	0	1½	2	....	....	....	....	....	....
155 (175†)	125 (125†)	....	....	....	....	....	....	....	....	....	0	1¼	1½	0	1½	2
165	130	000	2	2	....	....	....	....	....	....	....	....	....	....	....	....
175 (200†)	135 (150†)	....	....	....	00	1½	2	00	1½	2	....	....	....	....	....	....
185 (200†)	145 (150†)	....	....	....	....	....	....	....	....	....	00	1½	2	00	1½	2
195	155	0000	2	2½	....	....	....	....	....	....	....	....	....	....	....	....
200	155 (175†)	....	....	....	000	1½	2	000	2	2	....	....	....	....	....	....
210	165 (175†)	....	....	....	....	....	....	....	....	....	000	1½	2	000	2	2
215	170	250	2½	2½	....	....	....	....	....	....	....	....	....	....	....	....
230	180 (200†)	....	....	....	0000	2	2	0000	2	2½	....	....	....	....	....	....
235	185 (200†)	....	....	....	....	....	....	....	....	....	0000	2	2	0000	2	2½
240	190	300	2½	3	....	....	....	....	....	....	....	....	....	....	....	....
255	205	....	....	....	250	2	2½	250	2½	2½	....	....	....	....	....	....
260	210	350	2½	3	....	....	....	....	....	....	....	....	....	....	....	....
270	215	....	....	....	....	....	....	....	....	....	250	2	2½	250	2½	2½
280	225	400	3	3	....	....	....	....	....	....	....	....	....	....	....	....
285	230	....	....	....	300	2	2½	300	2½	3	....	....	....	....	....	....
300	240	....	....	....	....	....	....	....	....	....	300	2	2½	300	2½	3
310	250	....	....	....	350	2½	3	350	2½	3	....	....	....	....	....	....
320	260	500	3	3½	....	....	....	....	....	....	....	....	....	....	....	....
325	260	....	....	....	....	....	....	....	....	....	350	2½	3	350	2½	3
335	270	....	....	....	400	2½	3	400	3	3	....	....	....	....	....	....
355	285	600	3	3½	....	....	....	....	....	....	....	....	....	....	....	....
360	290	....	....	....	....	....	....	....	....	....	400	2½	3	400	3	3
380	310	....	....	....	500	3	3	500	3	3½	....	....	....	....	....	....
385	310	700	3½	4	....	....	....	....	....	....	....	....	....	....	....	....
400	320	750	3½	4	....	....	....	....	....	....	....	....	....	....	....	....
405	330	....	....	....	....	....	....	....	....	....	500	3	3	500	3	3½
420	340	....	....	....	600	3	3½	600	3	3½	....	....	....	....	....	....
455	370	....	....	....	....	....	....	....	....	....	600	3	3½	600	3	3½
460	375	....	....	....	700	3	3½	700	3½	4	....	....	....	....	....	....
475	385	....	....	....	750	3½	4	750	3½	4	....	....	....	....	....	....
490	395	....	....	....	....	....	....	....	....	....	700	3	3½	700	3½	4
500	405	....	....	....	....	....	....	....	....	....	750	3½	4	750	3½	4

†Ratings for 3-wire, single-phase residential services using RH, RHH, RHW, THW & XHHW conductors

‡On a 4-wire, 3-phase wye circuit where the major portion of the load consists of electric-discharge lighting, the ampacity of the conductors shall be reduced to 80%.

◆#6 XHHW requires 1" conduit for 3φ 4W

●#8XHHW requires ¾" conduit for 3W.

◐Special 90°C rating for THW (14-8) within electric discharge lighting equipment per NEC Article 410-31

★For panelboard branch circuits, wire size should be no smaller than shown above for 75°C wire. 90°C wire should be used for locations where ambient temperature above 30°C is expected.

NEC 220-2 (a) Continuous Loads.

The continuous load supplied by a branch circuit shall not exceed 80 percent of the branch-circuit rating.

NEC 220-10 (b) Continuous and Noncontinuous Loads.

Where a feeder supplies continuous loads or any combination of continuous and noncontinuous loads, neither the ampere rating of the overcurrent device nor the ampacity of the feeder conductors shall be less than the noncontinuous load plus 125 percent of the continuous load.

NEC 430-22 (a) Single Motor Circuit Conductors.

Branch-circuit conductors supplying a single motor shall have an ampacity not less than 125 percent of the motor full-load current rating.

SALES OFFICES IN THE UNITED STATES

ALABAMA
Birmingham (205) 942-2591
Dothan (205) 794-4842
792-8021
Huntsville (205) 539-2465
Mobile (205) 666-6120

ALASKA
Anchorage (907) 274-8531

ARIZONA
Phoenix (602) 252-7136
Tucson (602) 884-8150

ARKANSAS
Ft. Smith (501) 782-2381
Little Rock (501) 666-5429

CALIFORNIA
Anaheim (714) 635-3641
Fresno (209) 268-6268
Los Angeles (213) 225-1281
Riverside (714) 687-1262
Sacramento (916) 452-7171
San Diego (714) 279-8650
San Jose (408) 292-5453
San Leandro
(Oakland) (415) 351-5700
Santa Barbara (805) 963-0801, 02
So. San Francisco (415) 871-0404

CARIBBEAN
(Miami) (305) 592-1536

COLORADO
Glendale
(Denver) (303) 758-7373
Pueblo (303) 545-4402

CONNECTICUT
Newington
(Hartford) (203) 666-1596

FLORIDA
Ft. Lauderdale (305) 792-1274
Ft. Myers (813) 936-5573
Jacksonville (904) 725-2822
Miami (305) 592-8005
No. Palm Beach (305) 844-2519
Orlando (305) 894-6321
Sarasota (813) 922-0709
Tallahassee (904) 222-6095
Tampa (813) 876-5168

GEORGIA
Atlanta (404) 432-4421
Columbus
(Muskogee) (404) 561-7825
Macon (912) 745-2382

HAWAII
Honolulu (808) 941-4405

IDAHO
Boise (208) 376-0552
Pocatello (208) 237-2181

ILLINOIS
Aurora (312) 892-7044
Champaign (217) 356-0211
Peoria (309) 673-0508
Rockford (815) 399-5520
Springfield
(Sangamon) (217) 546-1477
Westchester
(Chicago) (312) 865-7700
261-2400

INDIANA
Evansville (812) 477-1508
Fort Wayne (219) 483-3194
Highland
(Hammond) (219) 972-9600
(312) 721-6031
Indianapolis (317) 849-9800
Mishawaka
(South Bend) (219) 259-8521

IOWA
Bettendorf (319) 359-9148
Cedar Rapids (319) 366-0736
Des Moines (515) 276-8595

KANSAS
Salina (913) 825-4865
Wichita (316) 264-9338

KENTUCKY
Lexington (606) 278-0308
Louisville (502) 968-3616
Paducah (502) 443-8241

LOUISIANA
Baton Rouge (504) 926-7275
Lafayette (318) 233-1964
Metairie
(New Orleans) (504) 834-1043
Shreveport (318) 636-6453

MAINE
Portland (207) 774-1409

MARYLAND
Hagerstown (301) 739-5760
Lutherville
(Baltimore) (301) 252-7870
Rockville
(Wash. DC) (301) 881-2494
Salisbury (301) 749-2544

MASSACHUSETTS
Dedham (Boston) (617) 326-6610
Worcester (617) 853-3494

MICHIGAN
Flint (313) 232-7426
Grand Rapids (616) 459-3529
Lansing (517) 484-7411
Madison Hts.
(Detroit) (313) 585-5500
Saginaw (517) 792-1553

MINNESOTA
Duluth (218) 728-5968
Minneapolis (612) 544-3357

MISSISSIPPI
Jackson (601) 362-7441

MISSOURI
Kansas City (816) 483-3100
St. Louis (314) 821-8400
Springfield (417) 887-2307

MONTANA
Billings (406) 248-1203

NEBRASKA
Grand Island (308) 382-2552
Omaha (402) 392-0990

NEW HAMPSHIRE
Manchester (603) 668-1204

NEW JERSEY
Ballmawr
(Camden) (609) 933-1800
Pine Brook (201) 575-7000

NEW MEXICO
Albuquerque (505) 265-6621

NEW YORK
Albany (518) 869-8441
Buffalo (716) 836-5800
Mineola
(New York City) (212) 895-3150
(516) 248-0080
Rochester (716) 442-2010
Syracuse (315) 446-5800
White Plains (914) 428-7790

NORTH CAROLINA
Asheville (704) 254-7471
Charlotte (704) 332-5013
Greensboro (919) 275-8468
Raleigh (919) 782-1338
Wilmington (919) 799-2830-31

NORTH DAKOTA
Fargo (701) 235-7223
235-8005

OHIO
Akron (216) 836-5593
Cincinnati (513) 931-1870
Columbus (614) 486-4329
Dayton (513) 433-7771
Maple Hts.
(Cleveland) (216) 581-3400
Toledo (419) 535-1293
Youngstown (216) 782-2295

OKLAHOMA
Oklahoma City (405) 848-2851
Tulsa (918) 663-3268

OREGON
Eugene (503) 343-2591
Portland (503) 234-8488

PENNSYLVANIA
Allentown (215) 435-7469
Altoona (814) 942-1966
Broomall
(Philadelphia) (215) 353-3000
Camp Hill
(Harrisburg) (717) 761-4650
Pittsburgh (412) 343-7500
West Chester
(Brandywine) (215) 459-4900
Wilkes-Barre (717) 825-4569
York (717) 843-8959

PUERTO RICO
Hato Rey (809) 767-7344
764-3733

RHODE ISLAND
Cranston
(Providence) (401) 943-3380

SOUTH CAROLINA
Charleston (803) 556-0773
Columbia (803) 772-3553
Greenville (803) 288-6384

SOUTH DAKOTA
Sioux Falls (605) 334-2151

TENNESSEE
Chattanooga (615) 877-1381
Kingsport (615) 246-7922
Knoxville (615) 524-7477
Memphis (901) 365-7450
Nashville (615) 367-2620

TEXAS
Amarillo (806) 355-1511
Austin (512) 451-8855
Beaumont (713) 838-0597
Corpus Christi (512) 883-8417
Dallas (214) 637-1491
El Paso (915) 544-1575
Fort Worth (817) 457-3230
Harlingen (512) 423-1694
Houston (713) 777-9162
Longview (214) 753-2952
Lubbock (806) 762-5736
Midland (915) 694-8430
San Antonio (512) 349-0197
Waco (817) 776-3432

UTAH
Salt Lake City (801) 486-8447

VIRGINIA
Norfolk (804) 461-1290
Richmond (804) 285-7508
Roanoke (703) 344-7707

WASHINGTON
Bellevue (Seattle) (206) 455-4949
Spokane (509) 535-3685
Tacoma (206) 752-6694

WEST VIRGINIA
Barboursville
(Huntington) (304) 736-8944

WISCONSIN
Glendale
(Milwaukee) (414) 228-9850
Green Bay (414) 494-3313
494-3194

SM304-R7 NPC 6/77 Litho in U.S.A.